a

Atp2b1
Up: S1155, T1165
Down: S1206, S1207, S1208, S1211, S1215, S1219
Atp2b2
Down: S1185, S1189, S1186, S1193, S1197, S1184

Cacna1c
Down: S469, T471, S473, T476, S569, S576, T468, S808, S815

Cacna1a
Up: S431, T433, S450 ,S2030, S2220, S2226, T2228
Down: T427, S792
Cacna1b
Up: S48, S915, S936, S2209, S2138, S2014, S2035, S2056, S2062, S2064, S2077, S2083, S2085, S2188, S2117
Cacna1e
Up: T29, Y282, S793, S794, S826, S1982, S2017, S2021, S2134, T2225
Down: S2017, Y2014, S2073

Cacnb1
Up: S495, T499, S575, T579
Down: S416, S417, T418, S461, S462, T463
Cacnb2
Up: T467, T498, T505, T549
Down: S163, T164, S170, T171, S214, T215
Cacnb4
Up: S50
Down: S38, S397, S410, S443, S461, S474, S507

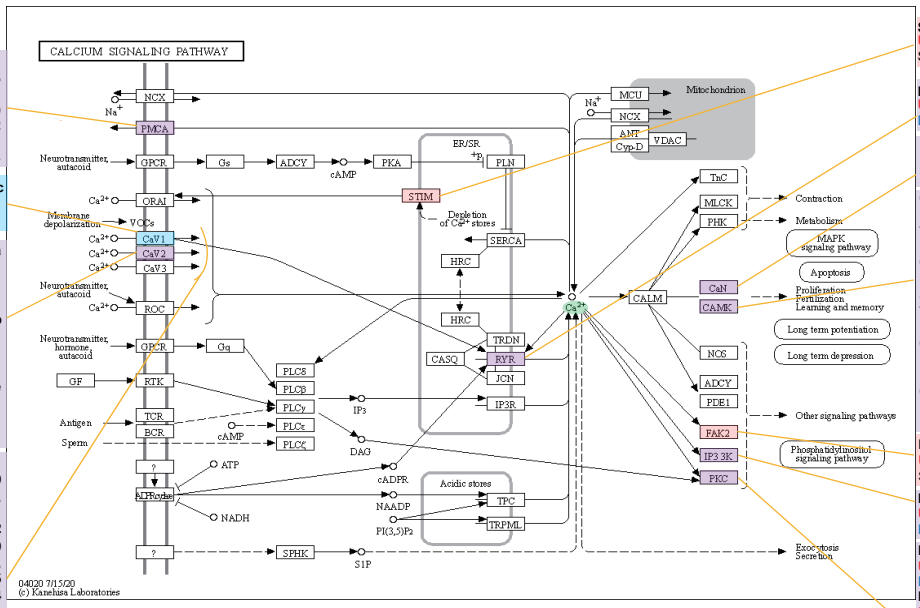

Stim2
Up: S523, S609, S612, S613, S650, S680

Ryr2
Up: S2692, S2696
Down: S2807, T2809

Ppp3ca
Up: S488, S498
Down: S452, S462

Camk2a
Up: T286, S330, S331, S333, T334, T336, T337
Down: S126, Y230, S234, S404
Camk2b
Up: T287, S315, T321, S331, S394, S395, T397, T398, T400, T401,
Down: Y231, S235
Camk2d
Up: T287
Down: Y231, S235
Camk2g
Up: T287, S311
Down: Y231, S235, S370, S381

Ptk2b
Up: S392, S394, S396, S399, Y402

Itpka
Up: S119, S121
Down: S185

Prkcb
Up: T642, S654, S660, S673
Down: T641
Prkcd
Up: S504, T505, T509, S530, T531, T535
Prkce
Down: S24
Prkcg
Up: S70, S297, S321, S326, S330
Prkci
Up: T411