CLINICAL STUDY PROTOCOL AXO-GM2-001

A TWO-STAGE, DOSE-ESCALATION AND SAFETY & EFFICACY STUDY OF BILATERAL INTRAPARENCHYMAL THALAMIC AND INTRACISTERNAL/INTRATHECAL ADMINISTRATION OF AXO-AAV-GM2 IN TAY-SACHS OR SANDHOFF DISEASE

Sponsor:	UMass Chan Medical School 55 Lake Ave North Worcester, MA 01655
Clinical Research Organization:	Premier Research One Park Drive, Suite 130 Box 13608 Research Triangle Park, NC 27709-0006 (919) 627-9100 www.premier-research.com
Protocol Number:	AXO-GM2-001
Study Drug Name:	AXO-AAV-GM2
Development Phase:	Two-Stage; Phase 1-3 (Stage 1: Phase 1, Stage 2: Phase 2/3)
Protocol Version:	Version 8.0
Protocol Version Date:	9 June 2023
Protocol Version Supersedes:	Version 7.0

CONFIDENTIAL

This clinical study protocol is confidential and proprietary property of UMass Chan Medical School. This document may not be reproduced or communicated to a third party without the prior written permission of UMass Chan Medical School.

SPONSOR SIGNATURE

Protocol Title: A Two-Stage, Dose-Escalation and Safety & Efficacy Study of Bilateral Intraparenchymal Thalamic and Intracisternal/Intrathecal Administration of AXO-AAV-GM2 in Tay-Sachs or Sandhoff Disease

Protocol Number: AXO-GM2-001

This clinical study protocol was subjected to critical review. The information contained within is consistent with current knowledge of the risks and benefits of the investigational product, as well as with the moral, ethical, and scientific principles governing clinical research as set out in the Declaration of Helsinki, and the guidelines on Good Clinical Practice.

_____

Terence Flotte, MD

Chief Research Officer

UMass Chan Medical School

Date: _____

INVESTIGATOR'S AGREEMENT

I have received and read the Investigator's Brochure for AXO-AAV-GM2. I have received and read the AXO-GM2-001 Clinical Study Protocol and agree to conduct the study as outlined. I agree to maintain the confidentiality of all information received or developed in connection with this protocol.

_____

Printed Name of Investigator

_____

Signature of Investigator

Date: _____

1. SYNOPSIS

Name of Sponsor/Company:
UMass Chan Medical School, Worcester, MA 01655 USA

Name of Investigational Product: AXO-AAV-GM2

Name of Active Ingredients: rAAVrh8-*HEXA* (also referred to as AAVrh8-HEXA and AAVrh8-CB-ci-HEXA in this protocol) and rAAVrh8-*HEXB* (also referred to as AAVrh8-HEXB and AAVrh8-CB-ci-HEXB in this protocol)

Title of Study:
A Two-Stage, Dose-Escalation and Safety & Efficacy Study of Bilateral Intraparenchymal Thalamic and Intracisternal/Intrathecal Administration of AXO-AAV-GM2 in Tay-Sachs or Sandhoff Disease

Study Center(s): Up to 3 U.S. sites

Principal Investigator:
Terence R. Flotte, MD
UMass Chan Medical School
55 Lake Ave. North
Worcester, MA 01655

Studied Period (years):	**Phase of Development:**
Estimated date first participant enrolled: 2020 Estimated date last participant completed: 2028	Stage 1: Phase 1; Stage 2: Phase 2/3.

Objectives:

Stage 1:

Stage 1 Primary Objective:

- To assess the safety and tolerability of AXO-AAV-GM2

Stage 1 Secondary Objective:

- To identify the optimal AXO-AAV-GM2 dose for Stage 2

Stage 1 Exploratory Objectives:

- To determine the impact of treatment with AXO-AAV-GM2 on clinical function as assessed by neurocognitive, adaptive, developmental, neurological and motor assessments
- To assess changes in biomarkers of disease activity
- To assess neurodegenerative and myelination imaging biomarkers following AXO-AAV-GM2 infusion
- To assess peripheral and central nervous system integrity following AXO-AAV-GM2 infusion

Stage 2:

Stage 2 Primary Objectives:

- To assess the safety and efficacy of surrogate biomarkers of disease activity following AXO-AAV-GM2 infusion
- To assess motor function following AXO-AAV-GM2 infusion

Stage 2 Secondary Objectives:

- To assess surrogate biomarkers of disease
- To evaluate the biodistribution of AXO-AAV-GM2
- To evaluate clinical function as assessed by neurocognitive function, neurodevelopment, and motor function

Stage 2 Exploratory Objectives:

- To further determine the impact of treatment with AXO-AAV-GM2 on clinical function as assessed by neurocognitive, adaptive, developmental and motor assessments
- To assess biomarkers of disease activity
- To assess neurodegenerative and myelination imaging biomarkers
- To assess peripheral and central nervous system integrity following AXO-AAV-GM2 infusion

Long-term Follow-up (LTFU):

Objectives:

- Continued monitoring of Stage 1 and Stage 2 objectives through 5 years post-administration

Study Design:

The study will be open-label, non-randomized and involve a single 2-part administration of AXO-AAV-GM2 by bilateral thalamic (BiTh) and dual intracisternal magna (ICM)/intrathecal (IT) infusion into the cerebrospinal fluid (CSF). Participants will undergo an immunosuppression regimen beginning prior to and following administration of AXO-AAV-GM2 treatment (Day -7 to Week 24) as outlined in Section 8.2. Gene transfer will be administered over the course of two days (Section 11.5) as follows:

- At Visit 1a/Day 1, participants will receive bilateral intraparenchymal infusions of AXO-AAV-GM2 into the thalamus (BiTh)
- At Visit 1b/Day 2, participants will receive ICM/IT infusion of AXO-AAV-GM2 into the CSF

All AXO-AAV-GM2 infusions will be comprised of a 1:1 mixture of rAAVrh8-*HEXA* and rAAVrh8-*HEXB*.

The study will be conducted in two stages, as follows:

Stage 1: Twelve (12) TSD or SD participants will be treated sequentially, in a dose-escalation manner, with the objective to assess safety and tolerability, and determine the optimal

dose to be studied in Stage 2. Dose selection will be determined from safety, biomarker, and relevant imaging, neurological and clinical data. Following gene transfer, infantile-onset and juvenile-onset participants will undergo safety and efficacy assessments according to the respective Schedule of Assessments Table 15 and Table 14, respectively).

Stage 2: Up to 10 infantile-onset TSD or SD participants will be treated with the optimal dose identified in Stage 1, with the objective to determine safety and efficacy (according to Table 15). The Primary Clinical Efficacy Endpoint measure will be assessed at 12-months.

Stage 1 (Safety and Dose Identification for Stage 2):

Enrollment into Stage 1 will be performed sequentially, with stepwise dose-escalation of participants.

- Stage 1 Participant 1 (I or J) will receive a starting dose of AXO-AAV-GM2 that corresponds to the same BiTh volume as TSD002 and in ICM/IT volume to achieve an equivalent total vector dose to TSD001. The independent Data Safety Monitoring Committee (DSMC), in conjunction with the Sponsor, will review all available safety data through the 4-week visit and determine whether to proceed with the next participant (low dose juvenile-onset participant).
- Dosing of subsequent participants will only occur after satisfactory DSMC and Sponsor review of 4-week safety data from the previously dosed participant as well as accumulated safety data from all previously dosed participants in the trial. In the Mid and High dose cohorts, after the DSMC has reviewed the 4-week safety data from the first (Juvenile) participant, an infantile and second Juvenile participant may be treated concurrently.

An additional participant may be entered at any dose level if a participant is lost to follow-up or experiences a ≥ Grade 3 related AE before 4 weeks post-gene transfer. Each staggered participant may start limited screening activities, as detailed in the schedule of assessments for juveniles (Table 14) and infants (Table 15), respectively. The rest of the study assessments can be pursued only once the DSMC and Sponsor approve the dosing of additional participants.

Gene transfer will be administered over the course of two days (Section 11.5) as follows:

- At Visit 1a/Day 1, participants will receive bilateral intraparenchymal infusions of AXO-AAV-GM2 into the thalamus (BiTh)
- At Visit 1b/Day 2, participants will receive ICM/IT infusion of AXO-AAV-GM2 into the CSF

All AXO-AAV-GM2 infusions will be comprised of a 1:1 mixture of rAAVrh8-*HEXA* and rAAVrh8-*HEXB*.

To ensure venous access and ability to draw protocol specified safety labs, as well as reduce the pain associated with difficult blood draws during the study, a central venous catheter may be inserted with caregiver consent prior to surgical gene transfer.

Following gene transfer, Stage 1 juvenile participants will be assessed for safety and efficacy over a 2-year period, during which they will undergo safety, biomarker, neurocognitive, neurologic and motor function assessments according to Table 14. Stage 1 infantile participants will undergo safety, biomarker, neurologic and motor function assessments according to Table 15 over a 1-year period. Neurologic and motor function assessments may be videotaped.

After the last participant in Stage 1 has been dosed and observed for 4 weeks, the DSMC will review the cumulative safety data and make a determination regarding the safety of the administered doses. The Sponsor will determine the optimal AXO-AAV-GM2 dose regimen to be administered in Stage 2 based on the DSMC safety recommendation and available biomarker, imaging, and clinical data. The DSMC will continue to review accumulated safety data at regular intervals throughout the duration of the study.

Stage 1 – Dose Escalation

Stage 1 dosing consists of a Starting Dose, Low Dose, Mid Dose, and High Dose (Figure 1). The first participant enrolled in the study can be of either sub-type (infantile or juvenile) and will be administered the Starting Dose. Prior to dosing of each participant, the DSMC must review available safety data from all previously dosed participants and make a recommendation regarding continued enrollment and dose escalation. Additional participants beyond those planned in a cohort may be dosed when recommended by the DSMC or requested by the regulatory agency, or if a participant within a dose level cohort is lost to follow up or experiences a ≥ Grade 3 related AE before 4 weeks post-gene transfer.

Requirements for dose escalation or progression to Stage 2 of the study are as follows:

1. Recommendation to continue as planned from DSMC, and:
   - At the Low Dose: at least 4 weeks of safety data are available from 2 juvenile and 1 infantile participants administered the Low Dose
   - For the Mid Dose and High Dose:
     - At least 4 weeks of safety data from at least 1 juvenile participant and 2 infantile participants are required to dose escalate.
     - In addition, dose escalation of juvenile participants may also occur based on at least 4 weeks of safety data from at least 2 juvenile participants and may occur prior to infantile dose escalation.
     -

Figure 1: Stage 1 Dose Escalation Scheme

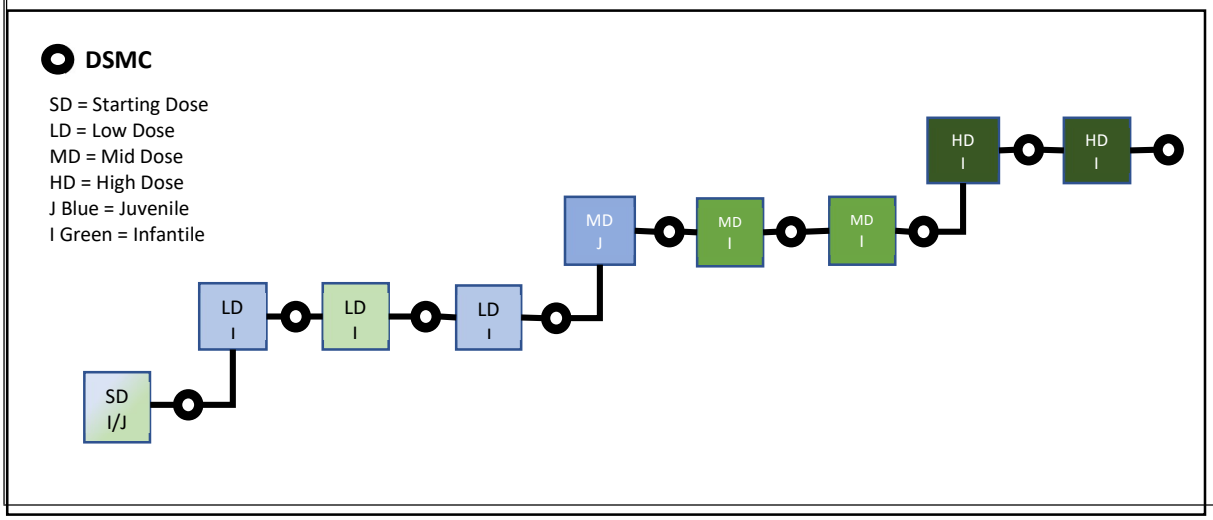

Stage 2 (Safety and Efficacy):

The study design and endpoints for Stage 2 will be further refined based on information gathered during Stage 1. Current expectations are that upon completion of Stage 1, up to 10 infantile-onset participants will be enrolled in Stage 2 of the study.

LTFU:

All participants enrolled in Stage 1 and Stage 2 of the trial will be followed up for a total of 5 years post-gene transfer. Therefore, upon completion of the 2-year follow-up period, juvenile-onset participants will be followed for an additional 3 years according to the assessments outlined in Table 16. Upon completion of the 12-month follow-up, Stage 1 and 2 infantile-onset participants will be followed for an additional 4 years according to the assessments outlined in Table 17.

Number of Participants (Planned):

Stage 1: Twelve (12) participants including juvenile-onset and infantile-onset subjects

Stage 2: Up to ten (10) infantile-onset participants (To be confirmed based on Stage 1)

Diagnosis and Main Criteria for Inclusion:

Inclusion Criteria:

1. Male or female participants with genetically diagnosed TSD or SD mutations of either *HEXA* gene or *HEXB* gene
   a. Stage 1 juvenile-onset participants must be ≥ 2 years old and ≤ 12 years old at time of gene transfer
      i. Diagnosis consistent with juvenile-onset TSD or SD
   b. Stage 1 infantile-onset participants must be between 6-20 months of age at the time of gene transfer
      i. Diagnosis consistent with infantile-onset TSD or SD

2. Juvenile onset participants must demonstrate a minimum of 2 of the following age-appropriate clinical features/abilities, confirmed by the site examiner at the time of screening and reaffirmed prior to the initiation of immunosuppression:
   a. A Gross Motor Function Classification-MLD (GMFC-MLD) score of 0, 1 or 2. The minimum gross motor function (GMFC-MLD level 2) is the 'ability to walk with support and walking without support is not possible (fewer than 5 steps)'. (Participants aged 2-12 years) Note: Any form of support is permitted; however, the participant must initiate each step and complete it for a total of 5 steps.
   b. Fine Motor Function
      - For Participants aged 4-12 years: A Manual Ability Classification System (MACS) score of I, II, III, or IV. The minimum level of manual ability (level IV) corresponds to 'Handles a limited selection of easily managed objects in adapted situations'.
      - For participants aged 2-4 years**:** attainment of fine motor function/coordination abilities and milestones with normal or a reduced quality of performance. That is, the ability to coordinate fingers and both hands to play, such as swinging a bat or opening a container (pathways.org) OR the ability to use fingertips to pick up small

objects, i.e., the child uses pad of his/her thumb and any fingertip to grasp a pellet or small object as described in BSID III Fine Motor Sub-test Item #26. .

c. Speech:

- For participants aged 4-12 years, a speech disturbance score of 0, 1, 2 or 3 on the speech disturbance subset of the Scale for Assessment and Rating of Ataxia (SARA). The minimum speech requirement is a speech disturbance in which most words can be understood, with occasional words difficult to understand secondary to dysarthria.
- Participants aged 2-4 years who have attained the communication milestone of ability to consistently use 2-3 word phrases may be assessed in line with this criterion using the speech disturbance subset of the SARA.
- For participants aged 2-4 years who have not yet attained the above communication milestone, the minimum requirement is the ability to imitate at least one word, even if the imitation consists of vowels only (BSID III, expressive communication subtest, item #16)

3. Infantile onset participants must demonstrate current* or historical† ability to sit without support for at least 5 seconds

   * As assessed in item 22 of the Bayley Scales of Infant and Toddler Development, Third Edition (BSID-III) Gross Motor Scale or documented medical records

   † Documented within available medical records

   In addition, infantile onset participants must demonstrate a **minimum of 3** of the following developmental skills confirmed by the site examiner at the time of screening and reaffirmed prior to the initiation of immunosuppression:

   a. Head control - While supine, with head in midline turns head symmetrically (score of 3 on GMFM item 1)
   b. Uses hands to support self while sitting
   c. Reach for an object that is held out for them above their chest while supine
   d. Transfer of object from hand to hand while supine
   e. Eye tracking while supine
   f. Looks at an object of interest for at least 3 continuous seconds

4. Surgical readiness for gene transfer by the routes of administration confirmed by the study neurosurgeon*, based on examination and MRI findings

   The following findings will disallow the performance of the BiTh procedure thereby excluding the participant from participation:

   - Any scalp and skull related lesion (e.g., vascular, infectious) over the surgical entry area
   - Any intracranial lesion (e.g., vascular, cystic, other mass lesions), significant immaturity or deformity of the brain anatomy that would make the intended surgical trajectory high risk

   The following findings will disallow the performance of the ICM/IT procedure thereby excluding the participant from participation:

- Any skin related lesion (e.g., vascular, infectious) over the lumbar puncture site
- Any intraspinal or intracranial lesion in posterior fossa (e.g., vascular, cystic, other mass lesions) or significantly deformed, distorted brain, spinal and cisternal anatomy that make the intended intrathecal trajectory high risk or not feasible

[*] Participants otherwise eligible for study participation but deemed not currently fit for neurosurgery may be re-screened at the discretion of the investigator

5. Participants receiving off-label Zavesca® (miglustat) and/or Tanganil® (acetyl-leucine) must be willing to discontinue these therapies 30 days prior to the start of screening
6. Ability to reliably travel to the study sites for study visits according to the Schedule of Assessments

Exclusion Criteria:

1. Presence of G269S or W474C mutation in HEXA
2. Evidence of lower respiratory tract aspiration not easily manageable with thickening of feedings or substitution of a modified bottle nipple, as judged on a multi-texture contrast swallow.
3. History of multiple aspiration pneumonias occurring in the past twelve months.
4. Respiratory support in the form of ventilation (invasive or non-invasive).
5. History of drug-resistant seizures or status epilepticus
6. History and/or findings of spinal cord disease that would preclude the lumbar puncture and ICM/IT infusion procedures including:
   - Infectious process involving the spinal canal which may cause adhesions or septations in the spinal and/or subarachnoid space
   - Previous spinal surgeries
   - History of trauma, bleeding in the spinal canal
   - Vascular or cystic lesions, or any other mass lesion
   - Congenital deformities and malformations involving the spinal canal
   - Posterior fossa findings (low lying cerebellar tonsils, crowded foramen magnum, small or absent cisterna magna)
7. The participant's parent(s) or legal guardian(s) is unable to understand the nature, scope, and possible consequences of the study, or does not agree to comply with the protocol defined schedule of assessments
8. Any prior participation in a study in which a gene therapy vector or stem cell transplantation was administered
9. Immunizations of any kind in the month prior to screening

10. Cardiomyopathy or other cardiac disease based on echocardiogram and/or electrocardiogram, (ECG) that in the opinion of the Investigator would deem the paticipant unsafe to undergo surgical gene transfer
11. Indwelling ferromagnetic devices that would preclude MRI//MRS/DTI imaging
12. Ongoing medical condition that is deemed by the Investigator to interfere with the conduct or assessments of the study
13. Current clinically significant infections including any requiring systemic treatment including but not limited to human immunodeficiency virus (HIV), Hepatitis A, B, or C
14. History of or current chemotherapy, radiotherapy or other immunosuppressive therapy within the past 30 days. Corticosteroid treatment may be permitted at the discretion of the PI
15. Clinically significant laboratory abnormalities:

    Based on age-specific reference range and determined by the investigator:

    - Total WBC count
    - Hemoglobin
    - Creatinine
    - Pancreatic enzymes

    Based on the following thresholds:

    - Platelet count (< 150,000/µL)
    - Prothrombin (PT), partial thromboplastin time (PTT) >2X normal
    - Liver transaminases (Hy's Law: > 3x elevations above the ULN of ALT or AST and serum total bilirubin > 2xULN)
16. Participants for whom any of the proposed study procedures or medications (i.e., sirolimus, trimethoprim/sulfamethoxazole) would be contraindicated
17. Failure to thrive, defined as falling 20 percentiles (20/100) in body weight in the 3 months preceding Screening/Baseline
18. Participant is not suitable for participation in the study in the opinion of the Principal Investigator

Investigational Product, Dosage and Route of Administration:

All infusions will be comprised of a 1:1 mixture of rAAVrh8-*HEXA* and rAAVrh8-*HEXB* (AXO-AAV-GM2).

The Surgical Manual will contain detailed specific instructions for administration of AXO-AAV-GM2.

The anatomy of the participant's brain, spinal cord and subarachnoid space will be assessed by pre-operative MRI. (See Section 11.5)

Gene transfer will be administered over the course of two consecutive days as follows:

- At Visit 1a/Day 1, participants will receive bilateral intraparenchymal injections of AXO-AAV-GM2 into the thalamus (BiTh) at doses outlined in Table 1.
- At Visit 1b/Day 2, participants will receive ICM/IT infusion of AXO-AAV-GM2 into the CSF via microcatheter at doses outlined in Table 2.

Table 1: Stage 1 Bilateral Intrathalamic (BiTh) Doses – Visit 1a/Day 1

Group	Participant	Volume of Infusion (per thalamus)	Dose (per thalamus)	Intraparenchymal Catheter
Starting Dose	Participant (I or J)	0.18 mL	5.87E+12 vg	SmartFlow
Low Dose	Participant (J)	0.36 mL	1.17E+13 vg	BrainLab Flexible
	Participant (I)	0.36 mL	1.17E+13 vg	BrainLab Flexible
	Participant (J)	0.36 mL	1.17E+13 vg	BrainLab Flexible
Cohort 1 (Mid-Dose)	Participant (J)	0.72 mL	2.35E+13 vg	BrainLab Flexible
	Participant (I)	0.72 mL	2.35E+13 vg	BrainLab Flexible
	Participant (I)	0.72 mL	2.35E+13 vg	BrainLab Flexible
Cohort 2 (High-Dose)	Participant (I)	1.25 mL	4.08E+13 vg	BrainLab Flexible
	Participant (I)	1.25 mL	4.08E+13 vg	BrainLab Flexible

Note: Dosing based on final titer of 3.26E+13 vg/mL (1:1 mixture of AAVrh8-HEXA:AAVrh8-HEXB)

Table 2: Stage 1 ICM/IT Doses: Visit 1b/Day 2

Group	Participant	Total ICM/IT Infusion Volume	Dose
Starting Dose	Participant (I or J)	4.00 mL	1.30E+14 vg
Low Dose	Participant (J)	5.25 mL	1.71E+14 vg
	Participant (I)	5.25 mL	1.71E+14 vg
	Participant (J)	5.25 mL	1.71E+14 vg
Cohort 1 (Mid-Dose)	Participant (J)	5.25 mL	1.71E+14 vg
	Participant (I)	5.25 mL	1.71E+14 vg
	Participant (I)	5.25 mL	1.71E+14 vg
Cohort 2 (High-Dose)	Participant (I)	8.40 mL	2.74E+14 vg
	Participant (I)	8.40 mL	2.74E+14 vg

Note: Dosing based on final titer of 3.26E+13 vg/mL (1:1 mixture of AAVrh8-HEXA:AAVrh8-HEXB)

- 75% of the intended ICM/IT dose will be infused into the cisterna magna
- 25% of the intended ICM/IT dose will be infused at a thoracolumbar level (T12/L1)

The total dose (vg) of AXO-AAV-GM2 that will be administered during Stage 1 per participant ranges from 1.42E+14 to 3.56E+14 vg (Table 3).

Table 3: Total Vector Dose per Participant: BiTh and IT Dosing

Group	Participant	BiTh Dose	ICM/IT Dose	TOTAL DOSE
Starting Dose	Participant (I or J)	1.17E+13 vg	1.30E+14 vg	1.42E+14 vg
Low Dose	Participant (J)	2.35E+13vg	1.71E+14 vg	1.95E+14 vg
	Participant (I)	2.35E+13vg	1.71E+14 vg	1.95E+14 vg
	Participant (J)	2.35E+13vg	1.71E+14 vg	1.95E+14 vg
Cohort 1 (Mid-Dose)	Participant (J)	4.70E+13 vg	1.71E+14 vg	2.18E+14 vg
	Participant (I)	4.70E+13 vg	1.71E+14 vg	2.18E+14 vg
	Participant (I)	4.70E+13 vg	1.71E+14 vg	2.18E+14 vg
Cohort 2 (High-Dose)	Participant (I)	8.15E+13 vg	2.74E+14 vg	3.56E+14 vg
	Participant (I)	8.15E+13 vg	2.74E+14 vg	3.56E+14 vg

Note: Dosing based on final titer of 3.26E+13 vg/mL (1:1 mixture of AAVrh8-HEXA:AAVrh8-HEXB)

Stage 2 dosing regimen will be determined based on Stage 1 results.

Duration of treatment: AXO-AAV-GM2 will be administered as a single, two-part procedure

Reference Therapy, Dosage and Mode of Administration: N/A

Criteria for Evaluation:

Stage 1

Stage 1 Primary Endpoint:

- The incidence, severity, seriousness, and relatedness to treatment of treatment emergent adverse events (TEAEs) as graded NCI CTCAE v5.0

Stage 1 Secondary Endpoints:

- Safety and immunologic response endpoints
- Changes in vital signs including weight
- Changes in physical examination findings
- Changes in clinical safety laboratory tests
- Immunosuppression response markers

Stage 1 Exploratory Endpoints:

- Changes from baseline in developmental age-appropriate clinical function assessments
  - Infantile participants: Bayley Scales of Infant and Toddler Development, Third Edition (BSID-III), Hammersmith Infant Neurological Examination Section 2 (HINE-2; motor), Clinical Global Impression (CGI), Vineland-3 Neurological exam

- Juvenile participants: Neurocognitive function (as measured by the Wechsler, WPSSI, BSID-III depending on the participant's developmental age), Vineland-3, CGI, Neurological exam, fine and gross motor function and classification (as measured by GMFM-88, GMFC-MLD, timed motor function tests, 9-hole peg test, and the Manual Ability Classification System (MACS))

- Biomarker changes from baseline in:
  - Serum HEXA activity level
  - CSF HEXA activity level
  - GM2 ganglioside in CSF
- Change from baseline in brainstem auditory evoked response (BAER) and visual evoked response (VER) from baseline to Week 12 and Week 48
- MRI brain volume and Diffusion Tensor Imaging (DTI) indices of myelination and brain water change from baseline to Week 12 and Week 48
- MRS indices of metabolite accumulation change from baseline to Week 12 and Week 48

Stage 1 Juvenile-Onset Participant Efficacy:

Biologic and clinical efficacy endpoint measures will be performed for juvenile-onset participants enrolled in Stage 1 of the study. These endpoints will be analyzed in a descriptive manner, separately from that of the infantile-onset participants.

<u>Stage 2</u>

Stage 2 Primary Endpoint(s):

- Clinical Function: BSID-III Gross Motor domain change from baseline to Week 48 (12 months)
- Surrogate Biologic Marker: CSF HexA activity change from baseline to Visit 9/Week 48

Stage 2 Secondary Endpoints(s):

- Changes in Biomarkers:
  - Serum HexA activity levels change from baseline to Week 48 (12 months)
  - CSF GM2 ganglioside levels change from baseline to Week 48 (12 months)
- Biodistribution: Serum and CSF vector DNA levels will be measured over 48 weeks (12 months) to assess the pharmacokinetics of AXO-AAV-GM2
- Clinical Function:
  - BSID-III Composite score change from baseline over Week 48
  - Proportion of Motor Milestone responders based on Hammersmith Infant Neurological Examination (HINE) Section 2 from baseline to Week 48

    Responder defined as:

    i. The participant demonstrated at least a 2-point increase in the motor milestones category of ability to kick or achievement of maximal score on that category

(touching toes), or a 1-point increase in the motor milestones of head control, rolling, sitting, crawling, standing, or walking

AND

ii. Among the 7 motor milestone categories (with the exclusion of voluntary grasp), the participant demonstrated improvement (as defined in [i]) in more categories than worsening

- Proportion of infantile-onset participants maintaining the ability to sit without support as assessed in HINE Section 2 at Week 48

Stage 2 Exploratory Endpoint(s):

- Changes from baseline in developmental age-appropriate clinical function assessments as measured by BSID-III, HINE-2 (Motor), CGI, Neurologic exam, and Vineland-3
- Biomarker changes from baseline over 5 years in:
  - Serum HEXA activity level
  - CSF HEXA activity level
  - GM2 ganglioside in CSF
- Change from baseline in brainstem auditory evoked response (BAER) and visual evoked responses (VER) from baseline to Week 12, Week 24, and Week 48
- MRI brain volume and Diffusion Tensor Imaging (DTI) indices of myelination and brain water change from baseline to Week 12 and Week 48
- MRS indices of metabolite accumulation change from baseline to Week 12 and Week 48

Long-term Follow-up

- Continued assessment of Stage 1 and Stage 2 endpoints for a total of 5 years post-gene transfer

Statistical Methods:

The statistical analysis methods for Stage 1 and Stage 2 will reflect the design elements and objectives of each Stage, with descriptive methods and data listings the primary methods used for the Stage 1 data. The appropriate statistical models and analyses for Stage 2 will be informed by and developed based on the data from Stage 1. Potential comparison of outcomes to external control data may be performed and will be described in the statistical analysis plan.

Sample Size:

Stage 1: The objectives of Stage 1 are to evaluate safety and tolerability of AXO-AAV-GM2 and identify the optimal dose regimen to be used in Stage 2. The sample size of 12 participants including infantile and juvenile participants is expected to be sufficient to allow assessment of both the safety of the neurosurgical procedure and the stepwise evaluation of escalating BiTh and ICM/IT doses. Furthermore, biomarker, imaging and clinical data collected in Stage 1 are intended to inform the appropriate dose to progress to Stage 2.

Stage 2: The Primary Efficacy Endpoints for Stage 2 will be the BSID-III Gross Motor domain change from baseline to Week 48 (12 months) and CSF HexA activity change from baseline to Week 48 (12 months). The sample size of up to 10 participants is not based upon

hypothesis testing assumptions but rather the desire to assess neurodevelopment of participants at ages when they would be expected to be declining based on natural history data.

General Methods:

Stage 1 outcomes analysis will focus on comparisons of individual participant data using graphical displays (e.g., line-scatterplots of each participant's outcomes over time) to allow for visual inspection of any trends between the participants and within participants over time.

Stage 2 will include a comprehensive assessment of both efficacy and safety outcomes tabulated and presented using both descriptive and inferential statistics (where applicable) where specified.

Comparisons to external data sources (e.g., literature, natural history study data) may be performed as the data allow. The appropriate statistical models and analyses for Stage 2 will be informed by and developed based on the data from Stage 1 and will be described in the statistical analysis plan.

2. TABLE OF CONTENTS, LIST OF TABLES, AND LIST OF FIGURES

TABLE OF CONTENTS

SPONSOR SIGNATURE 2
INVESTIGATOR'S AGREEMENT 3
1. SYNOPSIS 4
2. TABLE OF CONTENTS, LIST OF TABLES, AND LIST OF FIGURES 17
3. LIST OF ABBREVIATIONS AND DEFINITIONS OF TERMS 22
4. INTRODUCTION 25
5. NATURAL HISTORY OF TSD AND SD 27
6. SCIENTIFIC RATIONALE 31
6.1. Clinical Experience 32
7. STUDY OBJECTIVES 35
7.1. Stage 1 35
7.1.1. Stage 1 Primary Objective 35
7.1.2. Stage 1 Secondary Objective 35
7.1.3. Stage 1 Exploratory Objectives 35
7.2. Stage 2 35
7.2.1. Stage 2 Primary Objectives 35
7.2.2. Stage 2 Secondary Objectives 35
7.2.3. Stage 2 Exploratory Objectives 36
7.3. Long-term Follow-up 36
7.3.1. Long-term Follow-up Objectives 36
8. INVESTIGATIONAL PLAN 37
8.1. Overall Study Design 37
8.1.1. Stage 1 (Safety and Dose Selection for Stage 2): 37
8.1.1.1. Stage 1 – Dose Escalation 38
8.1.2. Stage 2 (Safety and Efficacy) 39
8.1.3. LTFU 39
8.2. Prophylactic Immune Tolerance Induction (ITI) Regimen 40
8.2.1. Use of Rescue Steroids 42
8.3. Study Justification 43

8.3.1. Study Design....43
8.3.2. Immune Tolerance Induction (ITI) Regimen Justification....43
8.3.3. AXO-AAV-GM2 Dose Rationale....44
8.3.3.1. AXO-AAV-GM2 Dose Rationale Based on Early Clinical Data and Nonclinical Scaling....44
8.3.3.2. AXO-AAV-GM2 Vector Infusion Volume Scaling from NHPs for Intrathalamic Delivery....44
8.3.3.3. AXO-AAV-GM2 Vector Dose Volume Scaling from NHPs for ICM/IT Dosing....45
8.3.3.4. Calculation of Safety Margins based on Scaled Dose Volumes from NHP Safety Study (Hex-004)....46
8.3.4. AXO-AAV-GM2 Planned Dose Escalation....47
8.3.4.1. AXO-AAV-GM2 BiTh Clinical Dose Escalation Strategy....47
8.3.4.2. AXO-AAV-GM2 ICM/IT Clinical Dose Strategy....51
8.3.4.3. AXO-AAV-GM2 Total Vector Dose Summary....52
8.4. Number of Participants....53
8.5. Treatment Assignment....53
8.6. Dose Adjustment Criteria....53
8.7. Potential Risks....53
8.7.1. Potential Risks with AXO-AAV-GM2....53
8.8. Criteria for Study Termination....53
9. SELECTION AND WITHDRAWAL OF PARTICIPANTS....65
9.1. Participant Inclusion Criteria....65
9.2. Participant Exclusion Criteria....67
9.3. Participant Withdrawal Criteria....68
9.4. Study Stopping Criteria....68
10. TREATMENT OF PARTICIPANTS....70
10.1. Description of Study Drug....70
10.2. Concomitant Medications....70
10.3. Treatment Compliance....71
10.4. Randomization and Blinding....71
11. STUDY DRUG MATERIALS AND MANAGEMENT....72
11.1. Study Drug....72

11.2. Study Drug Packaging and Labeling 72
11.3. Study Drug Storage 72
11.4. Study Drug Preparation 72
11.5. AXO-AAV-GM2 Administration 72
11.5.1. Stage 2 Dosing 73
11.6. Study Drug Accountability 73
11.7. Study Drug Handling and Disposal 73
12. ASSESSMENT OF EFFICACY 74
13. SAFETY PARAMETERS 75
13.1. Vital Signs, Height, and Weight 75
13.2. Physical Examination 75
13.3. Electrocardiogram (ECG), Electroencephalogram (EEG) 75
13.4. Laboratory Assessments 75
13.4.1. Hematology 75
13.4.2. Blood Chemistry 76
13.4.3. Urinalysis 76
13.4.4. Virus Serology 76
13.4.5. CNS 76
13.4.6. Immunology 76
13.4.7. Vector Shedding 76
13.5. Chest X-Ray 76
13.6. Imaging: MRI, MRS, DTI 76
13.7. Ophthalmology 77
13.8. Brainstem Auditory Evoked Response (BAER) 77
13.9. Adverse and Serious Adverse Events 77
13.9.1. Definition of Adverse Events 77
13.9.1.1. Adverse Event (AE) 77
13.9.1.2. Serious Adverse Event (SAE) 77
13.9.1.3. Adverse Events of Special Interest (AESI) 78
13.10. Relationship to Investigational Product, Study Procedure and Administration System 78
13.11. Recording Adverse Events 79

13.12. Reporting Adverse Events....79
13.13. Reporting Device Deficiencies....80
14. STATISTICS....81
14.1. Sample Size....81
14.2. General Methods....81
14.3. Analysis Populations....82
14.4. Primary Efficacy Endpoints....82
14.5. Secondary Efficacy Endpoints....82
14.6. Safety Endpoints....84
15. ACCESS TO SOURCE DATA/DOCUMENTS FOR MONITORING....85
15.1. Audits and Inspections....85
15.2. Institutional Review Board (IRB)....85
16. QUALITY CONTROL AND QUALITY ASSURANCE....86
16.1. Deviations from Protocol....86
17. STUDY COMMITTEES....87
17.1. Independent Data and Safety Monitoring Committee (DSMC)....87
18. ETHICS....88
18.1. Ethics Review....88
18.2. Ethical Conduct of the Study....88
18.3. Written Informed Consent....88
19. DATA HANDLING AND RECORDKEEPING....89
19.1. Retention of Records....89
20. PUBLICATION POLICY....90
21. LIST OF REFERENCES....91

LIST OF TABLES

Table 1: Stage 1 Bilateral Intrathalamic (BiTh) Doses – Visit 1a/Day 1 12
Table 2: Stage 1 ICM/IT Doses: Visit 1b/Day 2 12
Table 3: Total Vector Dose per Participant: BiTh and IT Dosing 13
Table 4: Abbreviations and Specialist Terms 22
Table 5: Motor Development Timeline 29
Table 6: Scaled Human Vector Dose Volume from NHP (Hex-004) for BiTh Infusion 45
Table 7: Scaled Human Vector Dose Volume from NHP Safety Study (Hex-004) for CSF Infusion 46
Table 8: Safety Margins for Intrathalamic Vector Delivery and Infusion Volume 46
Table 9: Safety Margins for ICM/IT Vector Delivery and Infusion Volume 47
Table 10: Study AXO-GM2-001 Stage 1 BiTh Dose Escalation Plan 49
Table 11: Study AXO-GM2-001 Stage 1 Calculated Vd for Thalamic Infusion by Participant (results shown per thalamus) 50
Table 12: Study AXO-GM2-001 Stage 1 ICM/IT Infusion Volume and Dose by Participant 52
Table 13: Study AXO-GM2-001 Stage 1 BiTh and ICM/IT Total Vector Dose by Participant 52
Table 14: Schedule of Juvenile-Onset Participant Assessments 54
Table 15: Schedule of Infantile-Onset Participant Assessments 58
Table 16: Schedule of Juvenile-Onset Participant LTFU 62
Table 17: Schedule of Infantile-Onset Participant LTFU 63
Table 18: Investigational Product 70

LIST OF FIGURES

Figure 1: Stage 1 Dose Escalation Scheme 7
Figure 2: Residual Activity of HexA and GM2 Turnover in Skin Fibroblast Cell Culture 26
Figure 3: Sitting Without Propping Milestone Achievement and Loss 27
Figure 4: Average Time with Ability to Sit Without Propping 28
Figure 5: BSID-III Age-Equivalent Scores for Gross Motor Domain 30
Figure 6: Stage 1 Dose Escalation Scheme 39

3. LIST OF ABBREVIATIONS AND DEFINITIONS OF TERMS

The following abbreviations and specialist terms are used in this study protocol.

Table 4: Abbreviations and Specialist Terms

Abbreviation or Specialist Term	Explanation
AAV	Adeno-associated virus
AE	Adverse Event
AESI	Adverse event of special interest
ADR	Adverse drug reactions
ALT	Alanine aminotransferase
AST	Aspartate aminotransferase
BAER	Brainstem auditory evoked response
BiTh	Bilateral thalamic
BSA	Body surface area
BSID-III	Bayley Scales of Infant and Toddler Development, 3rd Ed
BUN	Blood urea nitrogen
CBA	Chicken β-actin
CBC	Complete blood count
CED	Convection enhanced delivery
CMP	Clinical Monitoring Plan
CNS	Central nervous system
CRF	Case report form
CRA	Clinical research associate
CRO	Contract research organization
CRIM	Cross reactive immunological material
CSF	Cerebrospinal fluid
CT	Computed Tomography
CTL	Cytotoxic T lymphocytes
DTI	Diffusion tensor imaging
DSMC	Data Safety Monitoring Committee
ECG	Electrocardiogram
EDC	Electronic Data Capture
EEG	Electroencephalogram
ELISA	Enzyme-linked immunosorbent assay
ERT	Enzyme replacement therapy
FDA	Food and Drug Administration
FBS	Fetal bovine serum

Abbreviation or Specialist Term	Explanation
GAA	Acid α-glucosidase
GCP	Good Clinical Practice
GMO	Genetically modified organism
GM2	Disialotetrahexosylganglioside
Hex	Hexosaminidase enzyme
HexA	Hexosaminidase A enzyme
HEXA	HEXA gene
HEXB	HEXB gene
HIPAA	Health Insurance Portability and Accountability Act
HINE	Hammersmith Infant Neurological Examination
HIV	Human immunodeficiency virus
Hs-CRP	High-sensitivity C-Reactive Protein
ICH	International Conference on Harmonization
ICM	Intracisternal Magna
ICP	Intracranial Pressure
ICV	Intracerebroventricular
IEC	Independent Ethics Committee
IL	Interleukin
IND	Investigational new drug
IPa	Intraparenchymal
IRB	Institutional Review Board
IRR	Infusion related reaction
ITT	Intent to treat
IT	Intrathecal
ITI	Immune tolerance induction
IV	Intravenous
IVIG	Intravenous immunoglobulin
LFTs	Liver function tests
LP	Lumbar puncture
LDH	Lactate dehydrogenase
LSD	Lysosomal storage disorder
LTFU	Long term follow-up
MedDRA	Medical Dictionary for Regulatory Activities
MMRM	Mixed-effect model repeated measure
MRI	Magnetic resonance imaging
MRS	Magnetic resonance spectroscopy

Abbreviation or Specialist Term	Explanation
NCI	National Cancer Institute
NHP	Non-human primate
NHS	Natural history study
NIH	National Institute of Health
PBMCs	Peripheral blood mononuclear cells
PBS	Phosphate buffered saline
PICU	Pediatric Intensive Care Unit
PI	Principal Investigator
PML	Progressive multifocal leukoencephalopathy
PO	Per os
PT	Prothrombin time
PTT	Partial thromboplastin time
RBC	Red blood cell
SADE	Serious adverse device effect
SAE	Serious adverse event
SD	Sandhoff disease
SMA	Spinal muscular dystrophy
SOP	Standard operating procedure
TEAE	Treatment emergent adverse event
Th	thalamus
TSD	Tay-Sachs disease
UNL	Upper normal limit
Vd	Volume of distribution
VER	Visual evoked responses
Vi	Volume of infusion
WBC	White blood cell
YO	Year old

4. INTRODUCTION

Tay-Sachs disease (TSD) and Sandhoff disease (SD) are lysosomal storage disorders (LSDs) caused by a deficiency in the enzyme β-N-acetyl-D-hexosaminidase A (HexA), which is responsible for GM2 ganglioside degradation. (Ferreira and Gahl 2017) Gangliosides are the main glycolipids of neuronal cell plasma membranes which ensure normal cellular activities. (Sandhoff and Harzer 2013) HexA is an isoenzyme consisting of α and β subunits which are encoded by the *HEXA* and *HEXB* genes, respectively. TSD is caused by mutations in *HEXA* encoding the α subunit, whereas SD is caused by mutations in *HEXB* encoding the β subunit. Both forms of GM2 gangliosidosis are caused by overwhelming storage of GM2 ganglioside within neurons throughout the central nervous system (CNS), which is normally degraded in the lysosome by the isozyme HexA. The resulting neuronal dysfunction and cell death induces the primary symptoms of the disease: motor impairment, seizures, and sensory impairments. The progression and symptoms associated with TSD and SD are virtually indistinguishable as they arise from dysfunction of the same lysosomal enzyme (HexA) and storage product (GM2).

There are 3 categories of GM2 gangliosidoses defined by the age of symptom onset: infantile, juvenile, and late-onset. Those with infantile-onset have the most severe mutations and despite achieving very early developmental milestones at expected age, quickly plateau and regress. Infantile-onset individuals are often diagnosed due to developmental delays, hypotonia, and exaggerated startle response beginning on average at approximately 5 months of age; however, diagnosis is made on-average at approximately 13 months of age (Smith et al. 2012). These infants and toddlers eventually develop hypotonia, seizures, swallowing difficulties and progress to a semi-vegetative state. Bley and colleagues reported the first survival analysis of patients affected by infantile-onset GM2 gangliosidosis, with only half surviving beyond the age of 3 years and one-quarter surviving to the age of 5 years (Bley et al. 2011). Juvenile-onset GM2 symptomatology generally develops at approximately 5 years of age (range of 1.5 – 15 years) with speech, gait or learning difficulties (Maegawa et al. 2006). Death occurs in a similar fashion to infantile-onset, but typically occurs in the second decade of life due to the slower rate of disease progression. Late-onset GM2 patients often have a normal lifespan, but develop gait abnormalities (often wheelchair bound), swallowing and speech difficulties, peripheral neuropathy as well as psychiatric manifestations.

The rate of storage, clinical disease onset and progression severity is largely determined by the particular mutation and associated level of residual HexA activity (Solovyeva et al. 2018). Conzelmann et al. reported a correlation between residual activity of HexA and the severity of GM2 gangliosidosis, through an assay system using radiolabeled GM2 ganglioside as a substrate in human fibroblast extracts. (Conzelmann et al. 1983) Hex A activities for infantile, juvenile, and adult-onset patients were ≤0.1, 0.5, and 2-4% of normal, respectively. Importantly, healthy probands were found to possess activities of 11% to 20% of normal, suggesting that low levels of residual HexA activity may be sufficient to achieve ganglioside normalization. This concept is further elucidated in Figure 2 below, adapted from Leinekugel, et al 1992 (Leinekugel et al. 1992).

Figure 2: Residual Activity of HexA and GM2 Turnover in Skin Fibroblast Cell Culture

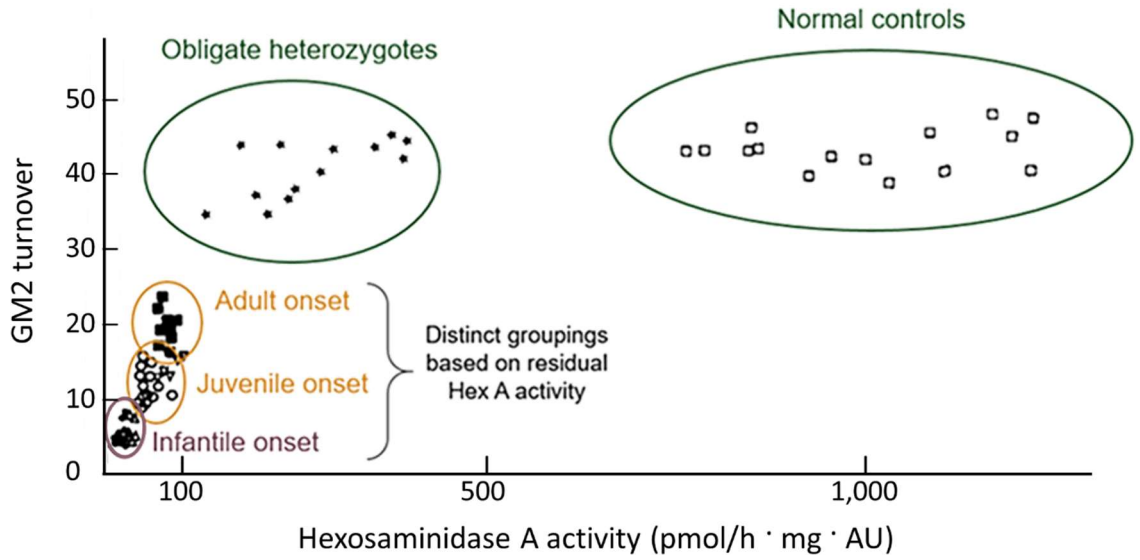

Adapted from Leinekugel et al. 1992

This study demonstrated a correlation between HexA activity and clinical disease severity. Groups corresponding to infantile, juvenile, and adult-onset disease forms could be distinguished with limited overlap in residual enzyme activity and were well separated from heterozygotes. Small increases in HexA activity were associated with milder phenotypes from the severe infantile-onset form to the mild adult-onset form. This suggests a range of approximately 5-15% of normal HexA activity may result in adequate ganglioside clearance and potentially an improved disease course with stabilized motor/neurologic function and achievement of developmental milestones.

HexA expression in serum and cerebrospinal fluid (CSF) will be assessed in this study and holds the potential to serve as a surrogate marker of disease. Given the known pathophysiology and direct-to-CNS route of administration, CSF HexA expression should be the most likely biologic surrogate endpoint that would predict clinical benefit.

There are no FDA-approved treatments for GM2 gangliosidoses and there is no effective clinical treatment generally. Although Miglustat, a glucosylceramide synthase inhibitor approved for monotherapy in adult patients with mild to moderate type 1 Gaucher disease, is known to cross the blood-brain barrier and commonly used off-label in TSD and SD patients, it is associated with peripheral neuropathy, tremor, diarrhea and weight loss (ZAVESCA® Package Insert 2011) and has not been observed to result in marked improvement in symptom management or disease progression. (Regier et al. 2016, Bembi et al. 2006, Maegawa et al. 2009, Shapiro et al. 2009) Current medical care can increase lifespan of affected patients through gastric tube feeding, seizure management, and vigilant pulmonary supportive care, but the quality of life is very poor, and patients eventually succumb to respiratory infection secondary to aspiration pneumonia (the most common cause of death in infantile gangliosidoses). There is a significant unmet clinical need for effective treatments for TSD and SD patients.

5. NATURAL HISTORY OF TSD AND SD

TSD and SD pathogenesis and natural history are well-described. Few phenotype differences exist among TSD and SD, and both are categorized as infantile, juvenile and late/adult based on the age of first symptom onset.

Infantile-onset phenotype disease course includes progressive neurological impairment and death in early childhood (Bley et al. 2011, Regier et al. 2016). Recent literature reports highlight the homogeneity of the infantile TSD and SD population and their consistent and predictable clinical course (Bley et al. 2011, Utz et al. 2017).

Bley and colleagues (Bley et al. 2011) studied the timing of regression in 97 cases of infantile GM2 gangliosidosis. The majority of infantile-onset patients acquired at least some early motor milestones, such as head control, reaching, and transferring at the appropriate age (according to the Denver Developmental Screening Test II), but few late infant milestones (Bley et al. 2011). Mean age at onset of the earliest symptom was 5.0 months (SD 3.3 months). Of the early infant milestones, the ability to sit without support or propping provides the most consistent natural history outcome. Only 55% of the infantile-onset GM2 patients achieved the ability to sit without support (red line in Figure 3; average age of 6.8 months when gained/SD 1.5 months), and almost all of those who gained this ability, lost it within 12 months (blue line in Figure 3; average age of 13.1 months when lost/ SD 6.8 months). See Figure 3 and Figure 4.

Figure 3: Sitting Without Propping Milestone Achievement and Loss

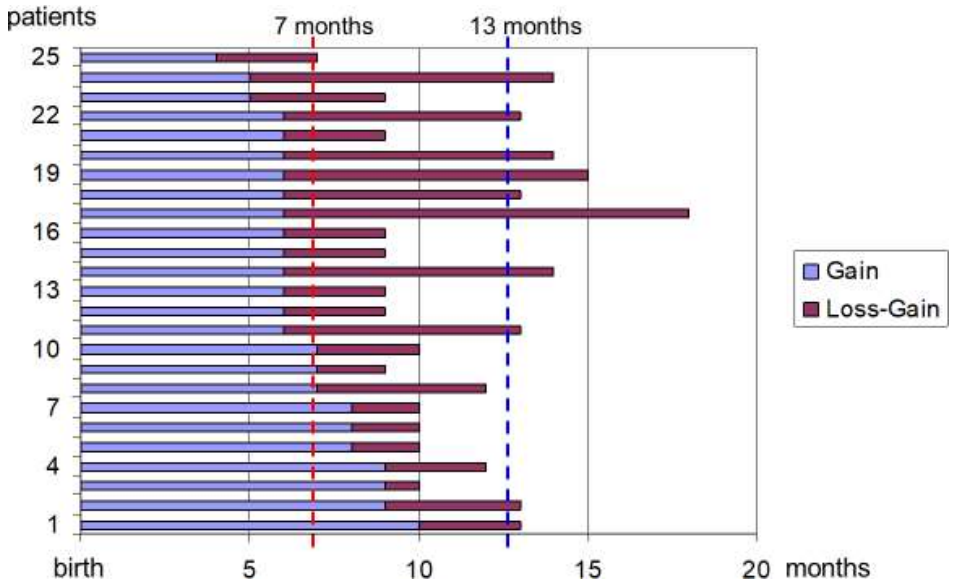

Adapted from Bley et al. 2011

Figure 4: Average Time with Ability to Sit Without Propping

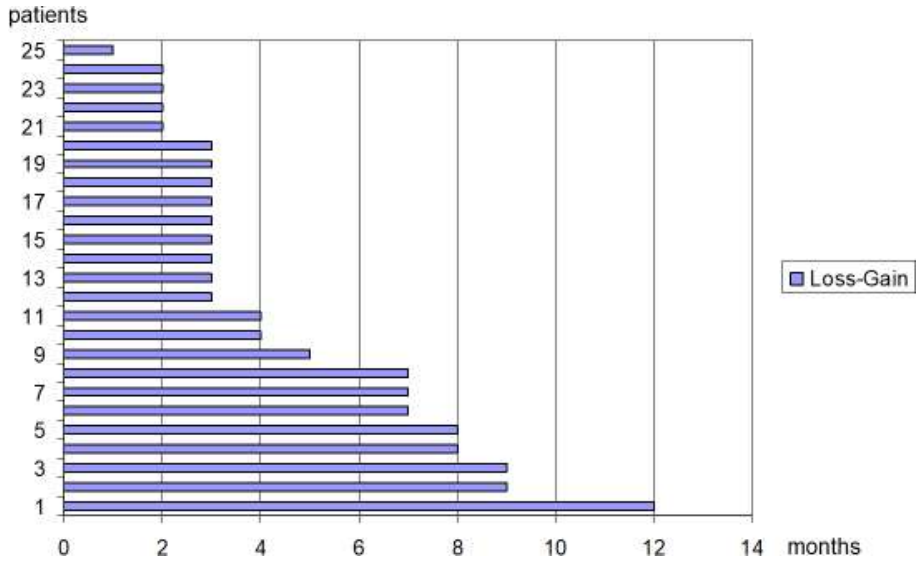

Adapted from Bley et al. 2011

Utz and colleagues recently reported the results of a prospective natural history study intended to establish a timeline of clinical changes occurring in infantile-onset gangliosidoses (Utz et al. 2017). This study was conducted under clinical trials (NCT00668187 and NCT02030015) of the Lysosomal Disease Network (U54NS065768) which is a part of the National Institutes of Health (NIH) Rare Diseases Clinical Research Network (RDCRN). Patients were enrolled in a natural history study in which clinical events were documented prospectively while patients were receiving clinical care. As part of clinical care, some patients were placed on a combination regimen, called Syner-G, which consists of miglustat and a very low carbohydrate diet, the ketogenic diet. The data for both the natural history study as well as Syner-G was obtained through clinical care. Standard clinical care included visits with providers at the University of Minnesota a minimum of once yearly. Clinical evaluations were performed by specialists in lysosomal diseases which include the following: metabolic geneticist, genetic counselor, pharmacotherapist, neurologist, cardiologist, and pediatric psychologist. All patients were also followed by providers near their homes, including a neurologist, geneticist and primary care physician. Follow-up telephone communications with the parents were made a minimum of once every 6 months and were conducted by a pharmacotherapist or clinical geneticist. These communications queried about onset of new clinical symptoms and changes in existing symptoms. Neurodevelopmental evaluations were completed using the Bayley Scales of Infant and Toddler Development®, Third Edition (BSID-III). The BSID-III was administered to all participants receiving neurodevelopmental evaluations, regardless of their chronological age. To determine functioning outside of the evaluation session, caregivers completed the Vineland Adaptive Behavior Scales, Second Edition (Vineland™-II). This measure is standardized for individuals from birth to 90-years-old and assesses domains including functional communication, daily living skills, social skills, and motor skills (Sparrow et al. 2017). Six-month intervals were used to summarize the timing of events for all the patients, corresponding with the minimal frequency of follow-up by study staff with patients' caregivers.

Twenty-three patients were enrolled in the study: 8 with infantile GM1 gangliosidosis, 15 with infantile GM2 gangliosidosis (9 with infantile TSD and 6 with infantile SD). The median age of onset of the first noted symptom for GM2 was 6 months and diagnosis at 15 months. The most common clinical changes in the infantile gangliosidoses were onset of hypotonia within the first 6 months of life, excessive oral and respiratory secretions, gastroesophageal reflux, dysphagia (followed by feeding-tube placement), and constipation. Utz and colleagues reported that most infantile GM2 patients had some motor developmental delay within the first 6 months of life and all patients had a delay by 12-months of age (Table 5).

Table 5: Motor Development Timeline

Infantile GM2 Motor Skills	N	Percent Never Gained	Patient Experienced	Age (Months) divided into 6-Month Intervals at which Motor Development Milestones Occurred				
				0 to 6	7 to 12	13 to 18	19 to 24	Experienced but age unknown
Gained independent head control	N=14	0%	100%	79%	7%			14%
Lost independent head control	N=14	-	93%		57%	21%	7%	7%
Gained ability to sit independently	N=13	62%	39%	31%	8%	15%		
Lost ability to sit independently	N=13	-	39%		23%			
Gained ability to crawl	N=13	100%	0%					
Lost ability to crawl	N=14	-	7%			7%		

Based on BSID-III data for GM2 patients only, adapted from Utz et al 2017.

Most patients had documented seizure disorders by 18 months of age, with the most common interval for seizure onset occurring between 13 to 18 months of age. Consistent with Bley et al. 2011, overall, motor skills that were gained within the first 6–12 months of life were lost in most GM2 patients by the age of 2 years. Most patients never gained the ability to crawl, and had a median survival for all patients with infantile-onset GM2 of 43.43 months (range for ages at death: 33.08–66.83 months).

There was no statistically significant difference between infantile-onset GM1 and GM2 patients when comparing the age of motor skills gained and motor skills lost. Gross motor skill scores (based on BSID-III Age Equivalent Scores for Gross Motor Domain) showed rapid decline in patients receiving two or more neurodevelopmental evaluations and reached the floor of the testing scale by 28 months of age for all tested patients (Figure 5).

Figure 5: BSID-III Age-Equivalent Scores for Gross Motor Domain

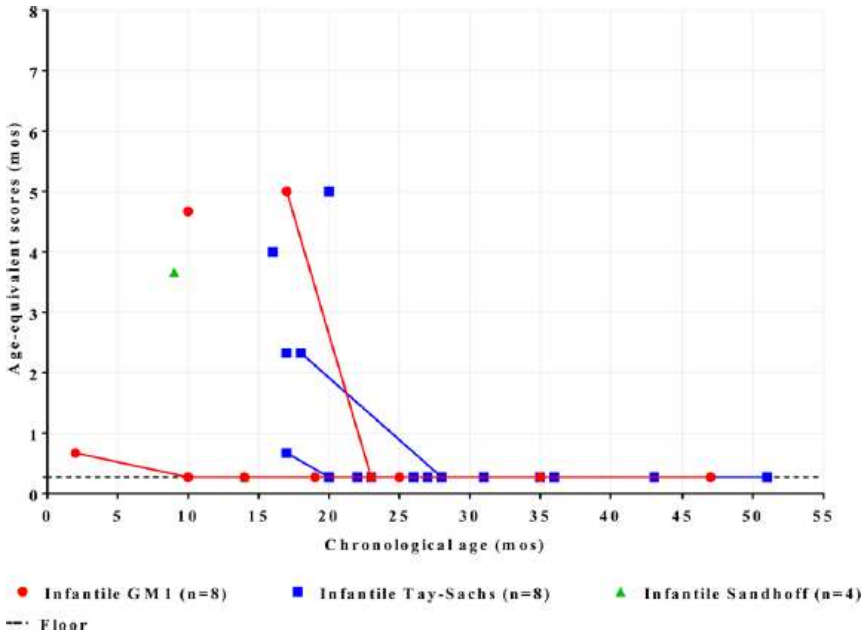

Source: Utz et al. 2017.

Maegawa and colleagues used combined retrospective and prospective collection of clinical, laboratory, molecular genetics, and imaging data from a cohort of 21 patients with juvenile-onset GM2 gangliosidosis, supplemented by a review of 134 cases of the disease reported in medical literature (Maegawa et al. 2006). Juvenile GM2 gangliosidosis is clinically heterogeneous, not only in terms of age of onset and clinical features but also with regard to the disease course. Mean age of onset of earliest symptom was 5.3 +/- 4.1 years (range: 1.5–15 years). Gait disturbances are the earliest symptom, followed by speech problems, incoordination, intellectual impairment, seizures, extrapyramidal signs, incontinence of sphincters, and upper motor neuron signs. Dysphagia, along with diarrhea/constipation, tend to emerge later, with a median onset of 3 to 3.5 years (Maegawa et al. 2006). This was also the first published analysis of survival in juvenile-onset GM2 gangliosidosis, reporting that nearly half of the patients die in the first decade and only one quarter live into the late teen years (Maegawa et al. 2006).

6. SCIENTIFIC RATIONALE

GM2 accumulation occurs primarily in neuronal cells, therefore, gene therapy must provide broad coverage of the brain and spinal cord to adequately address the neurologic deterioration associated with this condition. Direct CNS administration of AAVrh8 vectors encoding *HEXA* and *HEXB* has been shown effective in mouse, cat, and sheep models (Cachon-Gonzalez et al. 2006, Cachon-Gonzalez et al. 2012, Bradbury et al. 2013, McCurdy et al. 2015, Rockwell et al. 2015, Cachon-Gonzalez et al. 2018), and holds the potential for clinical efficacy in human participants with TSD or SD. Extensive preclinical efficacy studies of the gene therapy approach used in this protocol have been conducted.

Results of BiTh and CSF injections of AAVrh8 vectors in animal models of SD, as well as the safety and efficacy data for the latest generation of AAVrh8 vectors, supports the combined BiTh and ICM/IT delivery of gene therapy in these diseases with expectation of safety and potential therapeutic benefit.

Efficacy and Safety Study of AAVrh8-m*HEXA/B* in Sandhoff Disease Mice (Study Hex-003)

- Three cohorts of 4-week old SD mice were treated with AAVrh8-m*HEXA/B* vector (1.76E+10, 3.51E+10 or 7.02E+10 vg, based on qPCR titers) by bilateral injection into the thalamus combined with unilateral ICV delivery.
- Intracranial injection of AAVrh8 vectors in SD mice provided evidence of significant therapeutic benefit with no apparent major safety concerns.
- The two top dose groups showed improved survival compared to PBS-treated and untreated control SD mice.
- In the rotarod test, AAV treated SD mice in the two top dose cohorts performed significantly better than PBS-treated and untreated control SD mice. Hexosaminidase activity (HexA and Hex total) in the brain was significantly greater in vector-treated mice, than PBS-treated and untreated SD control mice, and the enzyme level directly correlated with AAV vector dose, with highest activity documented in the highest dose cohort.
- GM2 ganglioside content in brain was significantly lower in all AAV treatment groups compared to PBS-treated and untreated SD mice. The impact on GM2 ganglioside content in brain was inversely proportional to the AAV vector dose. No significant difference in spinal cord GM2 ganglioside content was apparent.

Safety Study of AAVrh8-cm*HEXA/B* in Normal Cynomolgus Macaques (Hex-004)

A safety study was carried out in normal young cynomolgus macaques receiving bilateral thalamic injection combined with unilateral ICV injection of a 1:1 admixture of AAVrh8 vectors encoding cynomolgus macaque *HEXA* or *HEXB*. NHPs received either 9.1E+12 or 2.3E+12 vg, based on qPCR titer, which roughly corresponded to the top and bottom doses tested in SD mice based on scaling from brain volumes.

- All animals tolerated the surgical procedure and brain MRI with no complications.

- Intracranial administration was well tolerated as was AAV-mediated expression of hexosaminidase in the thalamus and other brain regions, albeit with no evidence of increased activity in the spinal cord.
- NHP behavior remained unchanged for the duration of the experiments for all cohorts.
- Hexosaminidase activity above normal levels was documented in thalamic punches of all AAV treated NHPs as well as other areas of the brain. Increased enzyme activity above normal levels were not apparent for any of the spinal cord regions.

6.1. Clinical Experience

Safety and limited clinical efficacy data are available for AAVrh8*HEXA*/*HEXB* from Expanded Access Protocol UMMS-GTC-HEX-001 participants TSD001 and TSD002. For both participants, the administration procedures were well-tolerated, and the totality of the available data from neurology exams, neuromotor skills testing, biomarkers, and brain imaging provide early clinical support for proof-of-concept and starting dose selection for the proposed Phase 1 (Stage 1) study (AXO-GM2-001). The following is a summary of the clinical status of the two participants treated with AAVrh8*HEXA*/*HEXB* under expanded access, each having achieved the 13-month post-treatment visit.

TSD001

Participant TSD001 is a female with infantile-onset TSD due to two *HEXA* mutations: a 4-BP insertion in exon 11 (c1275-1278), a common Ashkenazi mutation; and a second mutation *HEXA*, c.82 C->T (p.Gln28). Her symptom onset began at 5-6 months with the loss of developmental milestones, and at 12 months, TSD001 was noted to have macrocephaly and MRI abnormalities. Progression of neurologic declined ensued and TSD was formally diagnosed at 14 months of age when she presented with non-febrile seizures. At 17 months of age, she underwent gastrostomy tube placement for feeding and medication administration.

AAVrh8*HEXA*/*HEXB* administration was performed on 15 November 2018 when TSD001 was 30 months of age. TSD001 was administered an immune suppression regimen consisting of rituximab, sirolimus, and corticosteroids prior to and following receipt of AAVrh8*HEXA*/*HEXB* transfer to prevent the risks of an inflammatory response to the vector and to protect AAV-transduced cells from an immune response to the AAVrh8 capsid. TSD001 underwent vector administration to the cerebrospinal fluid (CSF) via lumbar puncture with fluoroscopically guided catheter advancement to the cisterna magna where 75% of the dose (~9 mL) was administered followed by the remaining 25% of the dose (~3 mL)] at the L1-2 level. Due to her advanced stage of disease, BiTh infusion was not performed. The dose, based on ddPCR retesting, was 1.45E+14 vg (adjusted from preliminary calculated titer of 1.0E+14 vg based on the previous qPCR method). The ICM/IT procedure was performed without incident, with mild/moderate adverse events (AEs) related to immunosuppression therapy. The immunosuppression regimen was continued for 12 weeks post dosing. The only serious adverse events (SAEs) reported to-date were from pneumonia at Day 260 post dosing, which resolved following intubation and treatment with antibiotics. This was deemed by the investigator to be unrelated to the therapy or the procedure.

Following gene transfer, participant TSD001's overall clinical condition has remained stable, without deterioration on neurological exam. Mild improvement in trunk tone was noted at the 1 and 2-month follow up visits, and the parents reported a mild increase in responsiveness. The 12-month post dosing visit for TSD001 was completed as an at-home visit with the Principal Investigator on 15 December 2019. At 12-months post dosing, the participant was noted to have continued stabilization of neurological function (as assessed by neurology exam) and motor skills as assessed via the Children's Hospital of Philadelphia Infant Test of Neuromuscular Disorders (CHOP INTEND). TSD001 was noted to become seizure-free post dosing and has remained so to date. Additionally, she has shown other potential signs of biological activity and resultant efficacy including: 1) confirmed transgene expression in CSF at 3 months post dosing; 2) increased HexA enzyme activity in serum and CSF samples collected at 3 and 6 months post dosing (the latest time point these samples were drawn) compared to baseline; and 3) no substantial deterioration in white matter myelination on MRI scans at 6 months post dosing (the last time point at which MRI scans were performed).

TSD002

Participant TSD002 is a female with infantile-onset TSD due to two mutant *HEXA* alleles (heterozygous 1.75kb deletion of exons 11-13 and p.Val381* truncation mutation in exon 10). TSD002 was diagnosed shortly after birth due to two siblings affected by infantile-onset TSD. Her serum HexA level at one week of age was 1% of normal. Sibling 1 was diagnosed at 2 years of age and died at nearly 3 years of age; no genetic reports are available for this child. Sibling 2 began regressing at 7 months of age, developed seizures within a few months and currently is managed with tracheostomy due to recurrent pneumonia. Prior genetic report confirms the same two mutations for Sibling 2 as seen in TSD002.

At the age of 3 months, TSD002 was developmentally normal and asymptomatic. At the time of her pre-operative evaluation when she was 6 months of age, she began demonstrating early signs and symptoms of TSD with cherry red macula, self-hand stabilization when sitting up, and parents described reduced visual and auditory responsiveness.

TSD002 was administered an immune suppression regimen consisting of rituximab, sirolimus, and corticosteroids prior to and following receipt of AAVrh8*HEXA*/*HEXB* transfer. She underwent BiTh and ICM/IT infusion of AAVrh8*HEXA*/*HEXB* on 11 June and 12 June 2019, respectively. At the time of gene transfer, the participant was 7 months of age. The total dose, based on ddPCR testing, was 6.49E+13 vg (adjusted from preliminary calculated titer of 4.6E+13 vg based on the previous qPCR method). Based on ddPCR method results, 5.90E+12 vg; 180 µL was administered per thalamus at infusion rate of 3 µL/min with a rigid infusion cannula, and 5.31E13 vg; 5 mL was infused via ICM/IT administration using the flexible catheter (75% of dose to ICM/25% to IT).

A total vector dose of 4.6E+13 vg as determined by qPCR titer was administered, with 180 µL infused per thalami (1.548E+12 vg; 180 µL per thalamus at infusion rate of 3 µL/min with a rigid infusion cannula) and 5 mL infused via ICM/IT administration (4.3E+13 vg) using flexible catheter with 75% of the dose administered at the cisterna magna level and 25% at the thoracolumbar level.

The BiTh and ICM/IT procedures were performed without incident. Following gene transfer, the immunosuppression regimen was continued for 12 weeks. The only SAEs reported to-date were from a urinary tract infection at Day 90 post dosing, which resolved following hospitalization and treatment with antibiotics and was not considered related to either the gene therapy or the procedure.

The 6-month post dosing visit for TSD002 was completed on November 21, 2019, with stable safety monitoring. The CHOP INTEND total score for TSD002 was 60 at baseline and 3 months post dosing and dropped to 52 at 6 months. She remains seizure-free post dosing, and has shown other potential signs of biological activity with resultant efficacy including: 1) increased HexA enzyme activity in serum and CSF samples collected at 3 and 6 months post dosing (the latest time point these samples were drawn) compared to baseline; and 2) stabilization of disease on MRI scans at 3 months post dosing, with slow decline at 6 months (the last time point at which MRI scans were performed). Due to travel limitations caused by the ongoing COVID-19 pandemic, a telephone/video visit was performed on May 18, 2020 for her 12 month post dosing visit. At 16 months post dosing, she was noted to be able to sit for 5 seconds, retained visual tracking and response to auditory stimulation. The CHOP-INTEND score could not be conducted at the 12 month visit since it needs to be conducted in person. Clinically, TSD002 remains stable and only mildly symptomatic (as at baseline), whereas sibling 2, with the same mutations as TSD002, demonstrated rapid neurodegeneration and milestone regression at similar age.

7. STUDY OBJECTIVES

7.1. Stage 1

7.1.1. Stage 1 Primary Objective

- To assess the safety and tolerability of AXO-AAV-GM2

7.1.2. Stage 1 Secondary Objective

- To identify the optimal AXO-AAV-GM2 dose and administration regimen for Stage 2

7.1.3. Stage 1 Exploratory Objectives

- To determine the impact of treatment with AXO-AAV-GM2 on Clinical Function as assessed by neurocognitive, adaptive, developmental, neurological and motor assessments
- To assess changes in biomarkers of disease activity
- To assess neurodegenerative and myelination imaging biomarkers following AXO-AAV-GM2 infusion
- To assess peripheral and CNS integrity following AXO-AAV-GM2 infusion

7.2. Stage 2

7.2.1. Stage 2 Primary Objectives

- To assess surrogate biomarkers of disease activity following AXO-AAV-GM2 infusion
- To assess motor function following AXO-AAV-GM2 infusion

7.2.2. Stage 2 Secondary Objectives

- To assess surrogate biomarkers of disease
- To evaluate the biodistribution of AXO-AAV-GM2
- To evaluate clinical function as assessed by neurocognitive function, development, and motor function

7.2.3. Stage 2 Exploratory Objectives

- To further determine the impact of treatment with AXO-AAV-GM2 on clinical function as assessed by neurocognitive, adaptive, developmental and motor function
- To assess biomarkers of disease activity
- To assess neurodegenerative and myelination imaging markers following AXO-AAV-GM2 infusion
- To assess peripheral and central nervous system integrity following AXO-AAV-GM2 infusion

7.3. Long-term Follow-up

7.3.1. Long-term Follow-up Objectives

- Continued monitoring of Stage 1 and Stage 2 objectives through 5 years post-administration

8. INVESTIGATIONAL PLAN

8.1. Overall Study Design

The study will be open-label, non-randomized, single 2-part administration of AXO-AAV-GM2, by bilateral thalamic (BiTh) and dual intracisternal magna (ICM)/intrathecal (IT) administration into the CSF. Participants will undergo an immunosuppression regimen beginning prior to and following administration of AXO-AAV-GM2 treatment (Day -7 to Week 24) as outlined in Section 8.2. Gene transfer will be administered over the course of two days (Section 11.5) as follows:

- At Visit 1a/Day 1, participants will be administered bilateral intraparenchymal infusions of AXO-AAV-GM2 into the thalamus (BiTh)
- At Visit 1b/Day 2, participants will be administered ICM/IT infusion of AXO-AAV-GM2 into the CSF

All AXO-AAV-GM2 infusions will be comprised of a 1:1 mixture of rAAVrh8-*HEXA* and rAAVrh8-*HEXB*.

The study will be conducted in 2 Stages:

Stage 1: Twelve (12) TSD of SD participants will be treated sequentially, in a dose-escalation manner, with the objective to assess safety and tolerability, and determine the optimal dose to be studied in Stage 2. Dose selection will be determined from safety, biomarker, and relevant imaging, neurological and clinical data. Following gene transfer, infantile-onset and juvenile-onset participants will undergo safety and efficacy assessments according to the respective Schedule of Participant Assessments (Table 14 and Table 15).

Stage 2: Up to 10 infantile-onset TSD or SD participants will be treated with the optimal dose identified in Stage 1, with the objective to determine safety and efficacy (according to Table 15). The primary clinical efficacy endpoint will be assessed at 12 months post dosing.

All participants enrolled in Stage 1 and Stage 2 of the trial will be followed up for a total of 5 years post gene transfer in the LTFU study, to determine on-going safety and efficacy of the treatment.

8.1.1. Stage 1 (Safety and Dose Selection for Stage 2):

Enrollment into Stage 1 will be performed sequentially, with stepwise dose-escalation of participants.

- To bridge the proposed dosing in this protocol to the early clinical data available from expanded access participants, Participant 1 (I or J) will receive the same total dose of AXO-AAV-GM2 as TSD001 (treated by ICM/IT infusion only). This will be administered with the same BiTh volume TSD002 received (1.17E13 vg/360µL) followed with the ICM/IT volume (1.30E14 vg/4.00 mL) for the rest of the dose. The independent DSMC, in conjunction with the Sponsor will review all available safety

data through the 4-week visit and determine whether to proceed with the next participant (low dose juvenile-onset participant).

- Dosing of subsequent participants will occur after satisfactory DSMC and Sponsor review of 4-week safety data from the previously dosed participant as well as accumulated safety data from all dosed participants in the trial.

Each staggered participant may start limited screening activities, as detailed in the schedules of assessments Table 14 and Table 15 for juveniles and infants, respectively. The rest of the study assessments can be pursued only once the DSMC and Sponsor have approved continued enrollment/dosing of the next participant.

An additional participant may be entered at any dose level if a participant within that dose level is lost to follow up or experiences a ≥ Grade 3 related AE before 4 weeks post-gene transfer, or if requested by the DSMC or regulatory agency.

Following gene transfer, Stage 1 juvenile participants will be assessed for safety and efficacy over a 2-year period, during which they will undergo safety, biomarker, neurocognitive, neurologic and motor function assessments according to Table 14. Stage 1 infantile participants will undergo safety, biomarker, neurocognitive, neurologic and motor function assessments according to Table 15 over a 1-year period. Neurologic and motor function assessments may be videotaped.

After the last Stage 1 participant has been dosed and observed for 4 weeks, the DSMC will review the cumulative safety data and make a recommendation regarding the safety of the administered doses. The Sponsor will determine the AXO-AAV-GM2 dose regimen to be administered in Stage 2 based on the DSMC safety recommendation and available biomarker, imaging and clinical data. The DSMC will continue to review accumulated safety data at regular intervals throughout the duration of the study.

8.1.1.1. Stage 1 – Dose Escalation

Stage 1 dosing consists of a Starting Dose, Low Dose, Mid Dose, and High Dose (Figure 6). The first participant enrolled in the study can be either sub-type (infantile or juvenile) and will be administered the Starting Dose. Prior to dosing of each participant, the independent DSMC must review the available safety data from all previous participants and make a recommendation regarding continued enrollment and dose escalation. Additional participants beyond those planned in a cohort may be dosed, for example, if requested by the DSMC or regulatory agency, or if a participant within a dose level cohort is lost to follow up or experiences a ≥ Grade 3 related AE before 4 weeks post-gene transfer.

Requirements for dose escalation or progression to Stage 2 of the study are as follows:

1. DSMC recommendation to continue as planned, and:

- At the Low Dose: at least 4 weeks of safety data are available from 2 juvenile and 1 infantile participant administered the Low Dose.
- For the Mid Dose and High Dose:
  - At least 4 weeks of safety data from at least 1 juvenile participant and 2 infantile participants are required to dose escalate.
  - In addition, dose escalation of juvenile participants may also occur based on at least 4 weeks of safety data from at least 2 juvenile participants and may occur prior to infantile dose escalation.

Figure 6: Stage 1 Dose Escalation Scheme

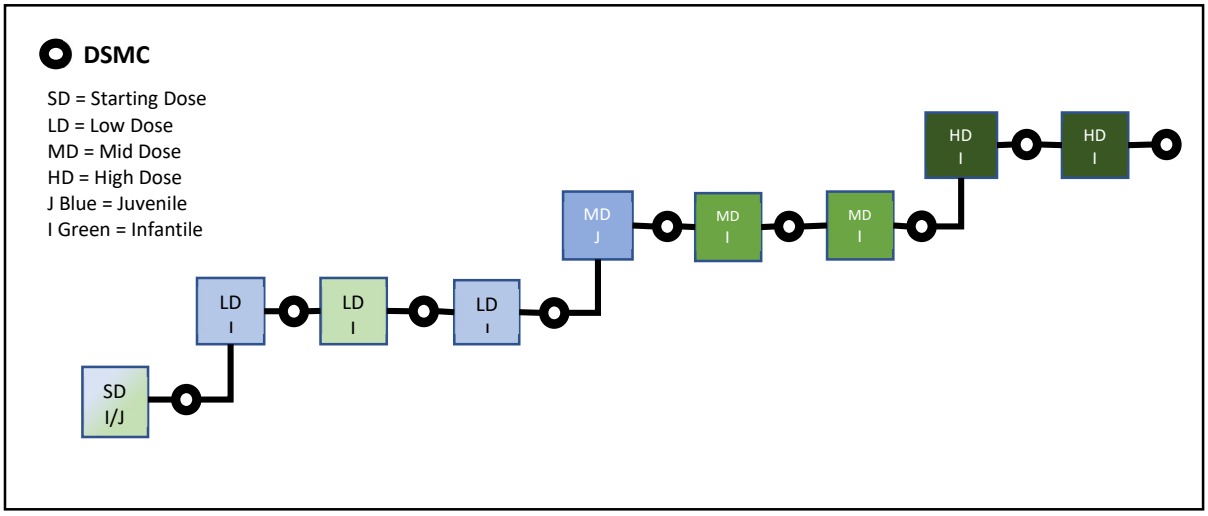

8.1.2. Stage 2 (Safety and Efficacy)

Up to 10 infantile-onset participants will be enrolled in Stage 2 of the study, which will assess safety and efficacy of AXO-AAV-GM2 at the optimal dose identified from Stage 1. The exact number of participants to be enrolled in Stage 2 may be revised based on Stage 1 data analysis. Following AXO-AAV-GM2 administration, participants participating Stage 2 will be followed according to Table 15.

To ensure venous access and ability to draw protocol specified safety labs, as well as reduce the pain associated with difficult blood draws during the study, caregivers will have the option to have a central venous catheter inserted into participants after consultation with the principal investigator and prior to surgical gene transfer (Table 15).

8.1.3. LTFU

All participants enrolled in Stage 1 and Stage 2 of the trial will be followed up for a total of 5 years post gene transfer in the LTFU study. Therefore, upon completion of the 12 month follow-up, Stage 1 and Stage 2 infantile-onset participants will be followed for 4 years according to Table 17. Upon completion of the 2-year follow-up period, juvenile-onset participants will be followed for an additional 3 years according to Table 16.

8.2. Prophylactic Immune Tolerance Induction (ITI) Regimen

To prevent the risks of an inflammatory response and to protect AAV-transduced cells from immune response to the AAVrh8 capsid and/or transgene, participants will be immunosuppressed prior to administration of AXO-AAV-GM2 treatment. The ITI regimen will be maintained as described below.

Starting on Day -7 of the study, the following will be initiated:

- Rituximab* at 375 mg/m^2 BSA (IV infusion)

  *Pre-medication for rituximab infusion will include:

  - acetaminophen 10-15 mg/kg given either PO, g-tube or rectal one time prior to infusion (may repeat q 4 hours for temperature >38.3°C)
  - diphenhydramine 1 mg/kg given either PO, g-tube or IV one time prior to infusion (may repeat 1 mg/kg IV PRN)
- Solu-Medrol at 10 mg/kg (IV infusion)
- Sirolimus* at 1.5 mg/m^2 BSA/day (PO or by feeding tube)

  *adjustment permitted to achieve trough levels of 7-12 ng/mL
- Prednisolone at 1-2 mg/kg/day (PO or by feeding tube)
- Lansoprazole at 1-1.5 mg/kg/day (PO or by feeding tube)
- Trimethoprim/sulfamethoxazole 2.5 mg/kg/day BID on 2 consecutive days per week (PO or by feeding tube) or per PI discretion

Day -2, Day 1 (BiTh Infusion Day), Day 2 (ICM/IT Infusion Day):

- Rituximab* at 375 mg/m^2 BSA (IV infusion), as needed for persistent CD20 count ≥ 5%

  *Pre-medication for rituximab infusion will include:

  - acetaminophen 10-15 mg/kg given either PO, g-tube or rectal one time prior to infusion (may repeat q 4 hours for temperature >38.3°C)
  - diphenhydramine 1 mg/kg given either PO, g-tube or IV one time prior to infusion (may repeat 1 mg/kg IV PRN)
- Continuation of sirolimus*, prednisolone, and lansoprazole dosing (PO or by feeding tube)

  *adjustment permitted to achieve trough levels of 7-12 ng/mL
- Continuation of trimethoprim/sulfamethoxazole 2.5 mg/kg/day BID on 2 consecutive days (PO or by feeding tube) or per PI discretion

Day 2-8:

- Continuation of sirolimus*, prednisolone, and lansoprazole dosing (PO or by feeding tube)

  *adjustment permitted to achieve trough levels of 7-12 ng/mL
- Continuation of trimethoprim/sulfamethoxazole 2.5 mg/kg/day BID on 2 consecutive days per week (PO or by feeding tube) or per PI discretion

- IV immunoglobulin (IVIG) ~1000 mg/kg administration – initiate only if immunoglobulin levels fall below 500 mL/dL. Dose will be adjusted to maintain serum trough levels of 500-1000 mg/dL. Will occur after vector infusion.

Day 15, Day 22:

- Continuation of sirolimus*, prednisolone, and lansoprazole dosing (PO or by feeding tube)

  *adjustment permitted to achieve trough levels of 7-12 ng/mL
- Continuation of trimethoprim/sulfamethoxazole 2.5 mg/kg/day BID on 2 consecutive days per week (PO or by feeding tube) or per PI discretion

Week 4/Month 1:

- Continuation of sirolimus*, prednisolone, and lansoprazole dosing (PO or by feeding tube)

  *adjustment permitted to achieve trough levels of 7-12 ng/mL
- Continuation of trimethoprim/sulfamethoxazole 2.5 mg/kg/day BID on 2 consecutive days per week (PO or by feeding tube) or PI discretion
- IVIG ~1000 mg/kg if IgG levels are below 500 mL/dL. Dose will be adjusted to maintain serum trough levels of 500-1000 mg/dL.

Week 6, Week 8, Week 10:

- Continuation of sirolimus*, prednisolone, and lansoprazole dosing

  *adjustment permitted to achieve trough levels of 7-12 ng/mL
- Continuation of trimethoprim/sulfamethoxazole
- IVIG ~1000 mg/kg if IgG levels are below 500 mL/dL. Dose will be adjusted to maintain serum trough levels of 500-1000 mg/dL.

Week 12/Month 3 to Week 20/Month 5:

- Initiate prednisolone tapering regimen:
  - Week 12-13: Reduce Dose by 50%
  - Week 13-14: Reduce week 12-13 Dose by 50%
  - Week 14-15: Reduce week 13-14 Dose by 50%
  - Week 15-16: Reduce week 14-15 Dose by 50% then stop
- Lansoprazole to be discontinued following completion of prednisolone tapering
- Continuation of sirolimus*

  *adjustment permitted to achieve trough levels of 7-12 ng/mL
- Continuation of trimethoprim/sulfamethoxazole
- IVIG ~1000 mg/kg if IgG levels are below 500 mL/dL. Dose will be adjusted to maintain serum trough levels of 500-1000 mg/dL.

Week 24/Month 6

- Initiate weaning of sirolimus:

  - Week 24-25: reduce dose by 50% (PO or by feeding tube)
  - Week 25-26: reduce Week 24-25 dose by 50% (PO or by feeding tube)
  - Week 26-27: reduce Week 25-26 dose by 50% (PO or by feeding tube) then stop
- Trimethoprim/sulfamethoxazole to be discontinued following completion of sirolimus wean

The ITI regimen will be stopped upon evidence of any of the following severe conditions for which no other cause has been identified: (1) intractable, severe opportunistic infections, not able to be managed with antibiotic, antifungal or antiviral therapy; (2) renal dysfunction (rising creatinine or BUN); (3) severe rash; (4) evidence of CNS problems including seizures or encephalopathy; (5) bleeding or clinically significant elevation of bleeding parameters.

Participants requiring discontinuation of the ITI regimen prior to Visit 1a (Day 1) will not be eligible for gene transfer and will be withdrawn from the study.

8.2.1. Use of Rescue Steroids

Triggering criteria:

A modification of the corticosteroid regimen is indicated if the following events occur in the trial:

1. A positive gamma interferon ELISPOT response to AAVrh8 capsid or HEXA/B transgene peptide pools on two successive ELISPOT assays done on or prior to the 3-month post-dosing time point. Please note that if one ELISPOT is positive, the assay should be repeated within 1 to 2 weeks.

AND EITHER

2. A worsening of clinical neurological signs or symptoms felt to be indicative of inflammation and/or injury, including but not limited to physical and neurological examination, CSF analysis and neuroimaging studies.

OR

3. An increase in ALT to 2× the pre-dosing level or 3× the upper limit of normal.

If these conditions are met the following regimen will be completed:

1. Methylprednisolone administered IV at 10 mg/kg/day for 3 successive days.
2. Followed by resumption of prednisolone at 2 mg/kg/day for at least 3 weeks prior to resumption of the scheduled weaning protocol.
3. Adjustment of sirolimus dose to achieve a trough level of 10-15 ng/mL for at least 3 weeks prior to resumption of dosing to achieve a level of 7-12 ng/mL, followed then by the scheduled plans for continuation and weaning.

If these conditions are not met, but the indicators ALT and ELISPOT are trending higher, the PI may, at his or her discretion increase the prednisolone dose within the range of 1 to 2

mg/kg/day and/or increase the sirolimus dose to achieve a trough level at a higher than the prior baseline, but still within the reference range (i.e., still less than 18 ng/ml).

8.3. Study Justification

8.3.1. Study Design

The uncontrolled study design is based on the consideration that TSD and SD are rapidly progressing and predictably fatal conditions for which natural history data exist with well-defined outcome measures very similar to those included in this study (Bley et al. 2011, Utz et al. 2017) can be used as a non-concurrent comparative/control group to measure treatment effect of AXO-AAV-GM2.

TSD and SD pathophysiology is well understood, and the natural history data reflect concurrent management of the condition during the disease-course of these patients. The natural history data highlight the homogeneity of the infantile TSD and SD population and the consistent and predictable clinical course involving the attainment of early milestones followed by developmental regression within a short time span. These factors allow for results of this study to: 1) be clearly interpretable as the treatment effect is expected to exceed the known variability in progression, 2) is not affected by patient or investigator motivation or choice of participants for treatment, 3) be objectively measured in a manner that reasonably manages and minimizes bias, 4) have a strong temporal association with administration of the investigational drug, and 5) is consistent with expected pharmacological activity based on the target and animal models. As there is limited experience with stereotactic intracerebral infusions in infants, and to manage potential safety concerns associated with AAV gene therapy, the first participant dosed in the low, mid, and high dose groups of Stage 1 will be a juvenile-onset participant to facilitate the stepwise escalation of intra-thalamic infusion volumes and doses.

8.3.2. Immune Tolerance Induction (ITI) Regimen Justification

The prophylactic ITI regimen will be administered starting 7 days prior to gene transfer and will continue to week 24 to prevent antibody response to AAV capsid in participants receiving gene therapy. The potential for immune modulation to prevent antibody response to AAV capsid in participants receiving gene therapy was demonstrated by Corti et. al following a trial of intra-diaphragmatic injection of AAV1-GAA in participants with infantile Pompe disease (Corti et al. 2017). Three CRIM negative participants receiving AAV1-hGAA had also received chronic immune modulation with rituximab and sirolimus due to pre-existing immune responses to enzyme replacement therapy (ERT). These participants had no immunologic response to AAV capsid proteins or the GAA protein. This was in contrast to the 5 CRIM positive participants who had not received immune modulation and had an average 150-fold increase in anti-AAV1 titer after exposure to AAV1.

Immune modulation using rituximab has become the therapy of choice for CRIM negative infants to maintain the efficacy of ERT (Elder 2013, Kazi 2017).

A similar mitigation of antibody response to AAV9 capsid and therapeutic protein has been observed in an expanded access trial of intravenous plus ICV administration of rAAV9-h*ASPA*

transgene in a child with Canavan disease (Corti et al. 2018). In this study with rituximab and sirolimus preconditioning, the immune response was abrogated.

In another ongoing trial, "Re-administration of Intramuscular AAV9 in Subjects with Late-Onset Pompe Disease," (NCT02240407, IND #17404) a similar immune modulation strategy to ablate B- and T-cells (rituximab, sirolimus, methylprednisolone and prednisone) prior to the initial exposure to AAV9 by intramuscular injection prevented the formation of antibody against AAV9 and the GAA transgene.

The ITI regimen was administered and well-tolerated in the two TSD subjects that are part of an ongoing Expanded Access clinical trial for AAVrh8-*HEXA*/*HEXB* gene therapy (IND# 18225).

8.3.3. AXO-AAV-GM2 Dose Rationale

8.3.3.1. AXO-AAV-GM2 Dose Rationale Based on Early Clinical Data and Nonclinical Scaling

AXO-AAV-GM2 will be directly infused into the CNS using BiTh and dual ICM/IT dosing approach to maximize the distribution of vector and expressed enzyme throughout the brain and spinal cord. This is based on evidence from multiple nonclinical studies, as well as early clinical data from the expanded access patients, for the safety and efficacy of AAVrh8-*HEXA/HEXB* administration. To bridge the early clinical data dosages to the proposed doses in this protocol, the starting dose was selected as the same BiTh volume as expanded access patient TSD002 and an ICM/IT volume that achieves an equivalent total vector dose to expanded access patient TSD001. To support dose escalation, this section will provide further rationale based on extrapolation from dose volumes evaluated in animals to their equivalent dose in humans. Conservative volumetric scaling from animal models to humans for dose calculation was based on the targeted regions of the CNS, specifically the volume of the thalamus for IPa administration and the volume of the CSF compartment for ICM/IT infusion.

8.3.3.2. AXO-AAV-GM2 Vector Infusion Volume Scaling from NHPs for Intrathalamic Delivery

In the cynomolgus macaque safety study (Hex-004), an upper dose of 1.69E+12 vg based on qPCR titer in an infusion volume of 0.150 mL was administered to each thalamus and found to be safe and well-tolerated.

Between 6 months and 20 months of age, the most likely age range for infantile patients at the time of vector infusion in the Stage 1 clinical trial, the thalamus changes in size less than 15% ranging from 4,003 mm^3 to 4,573 mm^3 (Tutunji et al. 2018). This difference is sufficiently small to use a standard volume of a 1YO (4,332 mm^3) as representative for infantile patients. This facilitates the determination of scaling factors to calculate dose volumes as described below. Likewise, for juvenile patients a volume of a 4YO (4,990 mm^3) was used for scaling, close to the average volume of the thalamus between 2 and 12 years of age, the range used in the inclusion criteria for Stage 1 of the clinical trial.

To determine scaling factors, the volume for the human thalamus is divided by that for the cynomolgus non-human primate used in the safety study with a volume of 590 mm^3. (Stephen Frey, personal communication). As shown below, the scaling factor for juvenile participants was

calculated to be 8.5x and infantile participants was calculated to be 7.3x. The scaling factors were then multiplied by the NHP dose volume to determine a scaled human equivalent (see Table 6).

$$Juvenile\ scaling\ factor = \frac{Human\ Th\ vol\ (\mathrm{mm3})^{1}}{NHP\ Th\ vol\ (\mathrm{mm3})^{2}} = \frac{4.99\ mL}{0.59\ mL} = 8.5x$$

$$Infantile\ scaling\ factor = \frac{Human\ Th\ vol\ (\mathrm{mm3})^{3}}{NHP\ Th\ vol\ (\mathrm{mm3})^{2}} = \frac{4.33\ mL}{0.59\ ml} = 7.3x$$

[1] Volume of human thalamus at 4 years of age, estimated from (Tutunji et al. 2018)
[2] Volume of NHP thalamus provided by Steven Frey (personal communication)
[3] Volume of human thalamus at 1 year of age, estimated from (Tutunji et al. 2018)

Table 6: Scaled Human Vector Dose Volume from NHP (Hex-004) for BiTh Infusion

Participant Type	Max NHP Infusion Vol	Human Scaling Factor	Scaled Human Infusion Volume Equivalent
Juvenile	0.150 mL	8.5	1.28 mL
Infantile	0.150 mL	7.3	1.10 mL

8.3.3.3. AXO-AAV-GM2 Vector Dose Volume Scaling from NHPs for ICM/IT Dosing

In the cynomolgus macaque safety study (Hex-004), a maximum dose of 6.76E+12 vg based on qPCR titer and infusion volume of 600 µL was administered to the CSF via a unilateral ICV infusion and was found to be safe and well-tolerated (the NHP study employed a dual thalamus and CSF dosing strategy). Using the same scaling strategy calculations as described above, the scaling factors for human equivalent vector dose volumes were determined. A total CSF volume of 170 mL was used for juvenile and 150 mL for infantile patients. Note that the estimated human CSF volumes were adjusted upward based on higher CSF volume content noted in children with GM2 gangliosidosis (Nestrasil et al. 2018). For the NHP, a total CSF volume of 13.0 mL was used for the scaling denominator as shown in the equations below. From these values, the CSF scaling factor was calculated as 13.1x for juveniles and 11.5x for infantile patients. The scaling factors were then multiplied by the NHP dose volume to determine a scaled human equivalent (see Table 7).

$$Juvenile\ scaling\ factor = \frac{Human\ CSF\ vol\ (mL)^{1}}{NHP\ CSF\ vol\ (mL)^{2}} = \frac{170.0\ mL}{13.0\ mL} = 13.1$$

$$Infantile\ scaling\ factor = \frac{Human\ CSF\ vol\ (mL)^{3}}{NHP\ CSF\ vol\ (mL)^{2}} = \frac{150.0\ mL}{13.0\ mL} = 11.5$$

[1] Volume of human CSF estimated from Jang et al. 2019, McAllister et al. 2017, and Nestrasil et al. 2018
[2] Volume of NHP CSF estimated from Poplack et al. 1977

Table 7: Scaled Human Vector Dose Volume from NHP Safety Study (Hex-004) for CSF Infusion

Participant Type	Max NHP Vol	Human: NHP Scaling Factor	Scaled Human ICM/IT Infusion Volume Equivalent
Juvenile	0.600 mL	13.1	7.86 mL
Infantile	0.600 mL	11.5	6.92 mL

8.3.3.4. Calculation of Safety Margins based on Scaled Dose Volumes from NHP Safety Study (Hex-004)

The scaled dose volumes for BiTh and ICM/IT delivery, determined above, can be compared to the planned doses for the clinical trial. These results inform on the relative difference of the two doses and yield a safety factor by dividing the scaled human dose volumes (derived from the NHP safety study, Hex-004) by the proposed clinical dose volumes. Values greater than one indicate that the dose volumes scaled from the NHP study are higher than the planned dose volume resulting in a positive safety margin. The results are shown in Table 8 for intrathalamic administration and Table 9 for ICM/IT infusion to the CSF for the different dose groups in the planned clinical trial. Overall, the safety margins for BiTh infusion volumes are positive (values are ≥ 1.0) for all participants except the infantile-onset participants in Cohort2 (High Dose) where the margin is 0.9 (see Table 8). Likewise, the safety margins for ICM/IT are positive (values are ≥ 1.0) for all participants except Cohort 2 (High Dose), which have a safety margin of 0.9 and 0.8 for juvenile-onset and infantile-onset participants, respectively (see Table 9).

Table 8: Safety Margins for Intrathalamic Vector Delivery and Infusion Volume

Group	Participant	Planned Clinical Infusion Volume (mL)	Scaled Human Vector Infusion Volume Equivalent (mL)	Safety Margin
Starting Dose	Participant (I or J)	0.18	I: 1.1 J: 1.28	**I: 6.1** **J: 7.1**
Low Dose	Participant (J)	0.36	1.28	**3.6**
	Participant (I)	0.36	1.1	**3.1**
	Participant (J)	0.36	1.28	**3.6**
Cohort 1 (Mid Dose)	Participant (J)	0.72	1.28	**1.8**
	Participant (I)	0.72	1.1	**1.5**
	Participant (I)	0.72	1.1	**1.5**
Cohort 2 (High Dose)	Participant (I)	1.25	1.1	**0.9**
	Participant (I)	1.25	1.1	**0.9**

Table 9: Safety Margins for ICM/IT Vector Delivery and Infusion Volume

Group	Participant	Planned Clinical Infusion Volume (mL)	Scaled Human Vector Infusion Volume Equivalent (mL)	Safety Margin
Starting Dose	Participant (I or J)	4.00	I: 6.92 J: 7.86	**I: 1.7** **J: 2.0**
Low Dose	Participant (J)	5.25	7.86	**1.5**
	Participant (I)	5.25	6.92	**1.3**
	Participant (J)	5.25	7.86	**1.5**
Cohort 1 (Mid Dose)	Participant (J)	5.25	7.86	**1.5**
	Participant (I)	5.25	6.92	**1.3**
	Participant (I)	5.25	6.92	**1.3**
Cohort 2 (High Dose)	Participant (I)	8.4	6.92	**0.8**
	Participant (I)	8.4	6.92	**0.8**

8.3.4. AXO-AAV-GM2 Planned Dose Escalation

The dose escalation plan was informed by the nonclinical studies as well as the clinical experience from the two participants treated under Expanded Access Protocol UMMS-GTC-HEX-001. The BiTh infusion performed on participant TSD002 supported the feasibility and safety of the stereotactic BiTh infusion approach using rigid intracerebral infusion catheters and sequential, bilateral thalamic infusions, followed the next day by ICM/IT delivery of vector to the CSF. To safely increase the dose and volume of BiTh and ICM/IT infusions, while limiting the procedural time and duration of general anesthesia, several elements of the dosing process will be advanced in a stepwise manner during Stage 1 as described briefly below for BiTh dosing (Section 8.3.4.1) and ICM/IT delivery (Section 8.3.4.2). The BiTh and ICM/IT neurosurgical procedures will be described in detail within the Surgical Manual.

The surgical readiness of participants to undergo gene transfer for Study AXO-GM2-001 will be confirmed at Visit B (Day -16) by the neurosurgeon based on neurologic examination and MRI imaging of the participant's brain, spinal cord and IT space anatomy.

The neurosurgeon may determine the participant is not appropriate candidate for BiTh and/or ICM/IT infusion based on this assessment as described in the Surgical Manual.

8.3.4.1. AXO-AAV-GM2 BiTh Clinical Dose Escalation Strategy

The stereotactic neurosurgical BiTh infusion procedure will be performed by a pediatric neurosurgeon at UMMS according to Table 10 and as described in the Surgical Manual.

Participant 1 (I or J) will undergo the same procedure as that for the previously treated Expanded Access Protocol UMMS-GTC-HEX-001 participant TSD002 with rigid infusion cannulas for IPa

delivery (Smartflow, ClearPoint). Intra-operative CT scan may be performed in the OR to verify the catheter locations in the target thalamus.

Flexible infusion catheters (BrainLab) will be used and simultaneous infusion of 360 µL per thalamus will be performed on Low Dose participants. An intra-operative Computed Tomography (CT) scan of the brain will be performed shortly after bilateral infusion catheter placement to verify appropriate location in the thalamic targets. An additional intra-operative CT scan of the brain (with limited number of images focused on the thalamus to minimize radiation exposure) will be performed mid-way through the infusion to assess any infusion related changes and/or possible bleeding or injury. The infusions will be stopped in the event of an adverse event or CT scan finding at the discretion of the neurosurgeon.

Cohort 1 (Mid-Dose) participants will undergo simultaneous BiTh infusion of 720 µL per thalamus with the flexible infusion catheters. Intra-operative CT scan of the brain will be performed as described above. Cohort 2 (High-Dose) participants will receive 1,250 µL per thalamus with flexible infusion catheters (Table 10). Intra-operative CT scan of the brain will be performed as described above, and at the discretion of the surgeon, an additional scan may be performed. Based on the safety results from prior participants, the neurosurgeon will have the option to complete the infusion for Cohort 2 within the OR under general anesthesia with intubation, or alternatively, in the Pediatric Intensive Care Unit (PICU) under light sedation. If the decision is made to carry out the infusion within the OR, intra-operative CT scan of the brain will be performed as described above. Additional intra-operative CT scans of the brain may be performed to assess any infusion related changes and/or possible bleeding or injury. If the surgeon elects to complete the infusion within the PICU, intra-operative CT scan of the brain will be performed shortly after bilateral infusion catheter placement to verify appropriate location in the thalamic targets. The participant will then be transferred to the PICU for completion of the infusion. All participants will have brain MRI after completion of the infusion and removal of the cannulas. Additional details can be found in the Surgical Manual.

The optimal dose regimen to be used in Stage 2 will be identified from Stage 1 data including safety, biomarker, and additional data.

Table 10: Study AXO-GM2-001 Stage 1 BiTh Dose Escalation Plan

	Participant	Rate	Dose per Thalamus (vg)	Volume per Thalamus (µL)	Infusion Time	Catheter Type	Infusion Setting
Starting Dose	Participant (I or J)	4 µL/min	5.87E+12 vg	180	90 min (1.5 hours) (45 min x 2, sequentially)	Rigid (SmartFlow)	Operating Room †
Low Dose	Participant (J)	4 µL/min	1.17E+13 vg	360	90 min (1.5 hours) (simultaneous bilaterally)	Flexible (BrainLab)	Operating Room †
	Participant (I)	4 µL/min	1.17E+13 vg	360	90 min (1.5 hours) (simultaneous bilaterally)		Operating Room †
	Participant (J)	4 µL/min	1.17E+13 vg	360	90 min (1.5 hours) (simultaneous bilaterally)		Operating Room †
Cohort 1 (Mid Dose)	Participant (J)	4 µL/min	2.35E+13 vg	720	180 min (3 hours) (simultaneous bilaterally)		Operating Room †
	Participant (I)	4 µL/min	2.35E+13 vg	720			Operating Room †
	Participant (I)	4 µL/min	2.35E+13 vg	720			Operating Room †
Cohort 2 (High Dose)	Participant (I)	4 µL/min	4.08E+13 vg	1,250	312 min (5.2 hours) (simultaneous bilaterally)		Operating Room †† or PICU*
	Participant (I)	4 µL/min	4.08E+13 vg	1,250			Operating Room †† or PICU*

OR = Operating Room
† Limited intra-operative CT scan of the brain will be performed shortly after bilateral infusion catheter placement and mid-way through the infusion. At the discretion of the surgeon, infusions will be stopped if there is evidence of bleeding or injury, or an emergent adverse event
†† For infusions within the OR, additional intra-operative CT scans of the brain may be performed
* PICU infusion is at the discretion of neurosurgeon and based on safety results of prior treated participants' outcomes. If the surgeon elects to perform the infusion within the PICU, a single limited intra-operative CT scan of the brain will be performed shortly after bilateral infusion catheter placement and the participant will then be transferred

To achieve the broadest distribution of vector and transgene expression, the goal of the BiTh infusion is to fill as much of the thalamus as possible using a dosing scheme that holds the vector concentration constant (based on a titer of 3.26E+13 vg/mL) and to progressively increase the volume of infusion across consecutive participants. As infusion volume increases, so does the total vector dose (these dosing parameters are inherently confounded). The amount or % of the target thalamus that is filled with vector is based on the use of convection enhanced delivery (CED) to drive AAV through the brain parenchyma using pressure (Bobo et al. 1994). Infusion rates between 1 and 5 µL/min are typically used with CED and this technique has been successfully applied across many nonclinical and clinical studies to increase the distribution of a wide range of therapeutic agents including AAV (Ellinwood et al. 2011, Tardieu et al. 2017, Chien et al. 2017, Christine et al. 2019, Hudry et al. 2019, Kells et al. 2009, Yin et al. 2010). For delivery of AXO-AAV-GM2, an infusion rate of 4 µL/min will be used across all participants for CED of the vector. As shown in Table 11, the time for bilateral infusion will range from 1.5 to 5.2 hours.

In order to estimate the volume of distribution (Vd) of vector within the thalamus based on the volume of infusion (Vi), a correction factor can be applied for how far the vector spreads from the point of source of delivery with CED. From CED studies with delivery of AAV to the thalamus (and other brains structures), the Vd is substantially larger than the Vi. The Vd:Vi ratio can be conservatively estimated to be a factor of 3, meaning that the distribution of AAV in the thalamus will be 3 times the infusion volume (Yin et al. 2010). This is an important factor to help ensure that the infusion volume is appropriately sized to yield a distribution of AAV that is matched to the size of the target thalamus. The calculated Vd for infantile participants in the study ranges from 12% (if Participant 1 is an infantile) of the thalamus to 87% of the thalamus for Cohort 2 based on a standard volume of 4,322 mm^3 for a 1-year-old child (Table 11). The calculated Vd for juvenile participants in the study ranges from 11% (if Participant 1 is a juvenile) to 75% for Cohort 2 based on a standard volume of 4,990 mm^3 for a 4-year-old child (Table 11).

Table 11: Study AXO-GM2-001 Stage 1 Calculated Vd for Thalamic Infusion by Participant (results shown per thalamus)

Group	Participant	Dose	Volume of Infusion (mL)	Calculated Volume of Distribution (3 x Infusion volume)	Calculated Percent Volume of Target
Starting Dose	Participant (I or J)	5.87E+12 vg	0.18	540 mm^3	I: 12% J: 11%
Low Dose	Participant (J)	1.17E+13 vg	0.36	1,080 mm^3	22%
	Participant (I)		0.36	1,080 mm^3	25%
	Participant (J)		0.36	1,080 mm^3	22%
Cohort 1 (Mid-Dose)	Participant (J)	2.35E+13 vg	0.72	2,160 mm^3	43%
	Participant (I)		0.72	2,160 mm^3	50%
	Participant (I)		0.72	2,160 mm^3	50%
Cohort 2 (High-Dose)	Participant (I)	4.08E+13 vg	1.25	3,750 mm^3	87%
	Participant (I)		1.25	3,750 mm^3	87%

Note: Dosing based on final titer of 3.26E+13 vg/mL (1:1 mixture of AAVrh8-*HEXA*:AAVrh8-*HEXB*). Calculated percent volume of target based on a standard volume of 4,322 mm^3 (1YO) for infantile participants and 4,990 mm^3 (4YO) for juvenile participants as reported by Tutunji et al. 2018. Vd derived as 3 times the infusion volume divided by the thalamic volume.

8.3.4.2. AXO-AAV-GM2 ICM/IT Clinical Dose Strategy

ICM/IT infusion will be conducted the day following BiTh infusion in study AXO-GM2-001 via a lumbar puncture and advancement of a flexible catheter (Excelsior SL-10, Stryker) to the cisterna magna. Infusion will take place through the catheter, with 75% of the dose into the CSF at the level of the cisterna magna. The catheter will then be partially retracted to the thoracolumbar spinal cord level and the remaining 25% of dose will be infused into the CSF of the intrathecal space. The concentration of AXO-AAV-GM2 will be held constant across the dosing levels (3.26E+13 vg/mL), but the infusion volumes (and thus dose) will vary in Stage 1 (Table 12). Vector will be administered at a rate of 0.5 to 1.0 mL/min. Additional details can be found in the Surgical Manual.

Table 12: Study AXO-GM2-001 Stage 1 ICM/IT Infusion Volume and Dose by Participant

		Cisterna magna level (75% of vector)		Thoracolumbar level (25% of vector)		Total CSF Dose	
Group	**Participant**	**Dose (vg)**	**Infusion Volume (mL)**	**Dose (vg)**	**Infusion Volume (mL)**	**Dose (vg)**	**Infusion Volume (mL)**
Starting Dose	Participant (I or J)	9.79E+13	3.00	3.26E+13	1.00	1.30E+14	4.00
Low Dose	Participant (J)	1.28E+14	3.94	4.28E+13	1.31	1.71E+14	5.25
	Participant (I)	1.28E+14	3.94	4.28E+13	1.31	1.71E+14	5.25
	Participant (J)	1.28E+14	3.94	4.28E+13	1.31	1.71E+14	5.25
Cohort 1 (Mid Dose)	Participant (J)	1.28E+14	3.94	4.28E+13	1.31	1.71E+14	5.25
	Participant (I)	1.28E+14	3.94	4.28E+13	1.31	1.71E+14	5.25
	Participant (I)	1.28E+14	3.94	4.28E+13	1.31	1.71E+14	5.25
Cohort 2 (High Dose)	Participant (I)	2.05E+14	6.30	6.85E+13	2.10	2.74E+14	8.40
	Participant (I)	2.05E+14	6.30	6.85E+13	2.10	2.74E+14	8.40

Note: Dosing based on final titer of 3.26E+13 vg/mL (1:1 mixture of AAVrh8-*HEXA*:AAVrh8-*HEXB*)

8.3.4.3. AXO-AAV-GM2 Total Vector Dose Summary

The total dose (vg) of AXO-AAV-GM2 that will be administered per participant ranges from 1.42E+14 to 3.56E+14 vg (Table 13). Total dose is a combination of bilateral IPa infusion of viral vector into the thalamus and direct delivery of vector into the CSF.

Table 13: Study AXO-GM2-001 Stage 1 BiTh and ICM/IT Total Vector Dose by Participant

	Participant	**Dose per Thalamus**	**BiTh Dose**	**ICM/IT Dose**	**TOTAL DOSE**
Starting Dose	Participant (I or J)	5.87E+12 vg	1.17E+13 vg	1.30E+14 vg	1.42E+14 vg
Low Dose	Participant (J)	1.17E+13 vg	2.35E+13 vg	1.71E+14 vg	1.95E+14 vg
	Participant (I)	1.17E+13 vg	2.35E+13 vg	1.71E+14 vg	1.95E+14 vg
	Participant (J)	1.17E+13 vg	2.35E+13 vg	1.71E+14 vg	1.95E+14 vg
Cohort 1 (Mid-Dose)	Participant (J)	2.35E+13 vg	4.70E+13 vg	1.71E+14 vg	2.18E+14 vg
	Participant (I)	2.35E+13 vg	4.70E+13 vg	1.71E+14 vg	2.18E+14 vg
	Participant (I)	2.35E+13 vg	4.70E+13 vg	1.71E+14 vg	2.18E+14 vg
Cohort 2 (High-Dose)	Participant (I)	4.08E+13 vg	8.15E+13 vg	2.74E+14 vg	3.56E+14 vg
	Participant (I)	4.08E+13 vg	8.15E+13 vg	2.74E+14 vg	3.56E+14 vg

Note: Dosing based on final titer of 3.26E+13 vg/mL (1:1 mixture of AAVrh8-*HEXA*:AAVrh8-*HEXB*)

8.4. Number of Participants

Stage 1: Twelve (12) participants including juvenile-onset and infantile-onset participants

Stage 2: Up to ten (10) infantile-onset participants

LTFU: All participants Stage 1 and 2

8.5. Treatment Assignment

All participants will be assigned to treatment.

8.6. Dose Adjustment Criteria

Stage 1 dose escalation is defined in Section 8.3.4. Stage 2 dose will be based on results of Stage 1. Following selection of dose for Stage 2, no dose adjustments will be allowed.

8.7. Potential Risks

The risks of administering AXO-AAV-GM2 treatment in TSD or SD participants are not completely known. There are theoretical/potential risks with AXO-AAV-GM2, certain known risks associated with BiTh and ICM/IT administration of AXO-AAV-GM2, and there are certain known risks associated with the proposed ITI regimen. These risks are described in the Investigator's Brochure.

8.7.1. Potential Risks with AXO-AAV-GM2

These risks are described in the Investigator's Brochure.

8.8. Criteria for Study Termination

The study stopping criteria are outlined in Section 9.4. In the event of a stopping criteria event, the DSMC and Sponsor will be notified for determination of significant safety risks (as outlined in the DSMC Charter).

Table 14: Schedule of Juvenile-Onset Participant Assessments

Schedule of Activities	Visit A	Visit B	Visit C	Visit D	Visit 1a	Visit 1b	Visit 2	Visit 3	Visit 4	Visit 5	Visit 6	Visit 7	Visit 8	Visit 9	Visit 10	Visit 11	Visit 12	Visit 13	Visit 14	Visit 15
	Week - 8	Day -16	Day -7	Day -2	Day 1	Day 2	Day 8	Day 15	Day 22	Week 4	Week 6	Week 8	Week 10	Week 12	Week 16	Week 20	Week 24	Week 48	Week 72	Week 96
	±28d	±5d	±3d	±1d	-	-	±1d	±3d	±3d	±3d	±4d	±5d	±4d	±7d	±7d	±7d	±7d	±7d	±7d	±7d
ICF	X*	X																		
Inclusion/Exclusion Criteria	X*	X																		
Genetic Confirmation [1]	X*																			
Vital Signs [2]	X*	X	X	X	X	X	X	X	X	X	X	X	X	X			X	X[27]	X[27]	X[27]
Weight	X*	X	X	X			X	X	X	X	X	X	X	X			X	X[27]	X[27]	X[27]
Height	X*	X	X											X			X	X[27]	X[27]	X[27]
Physical Examination	X*			X	X	X	X	X	X	X	X	X	X	X			X	X[27]	X[27]	X[27]
Neurologic Examination [3]	X*			X		X	X	X	X	X	X	X	X	X			X	X[27]	X[27]	X[27]
Tele-health follow-up call															X	X		X[28]	X[28]	X[28]
Tele-health Neuro Exam																		X[28]	X[28]	X[28]
Ophthalmology Exam			X																	
Urinalysis					X									AN			AN	AN	AN	AN
Participant Appropriate Neuro-Cognitive Assessments[22]	X*									X				X			X	X[27]	X[27]	X[27]
Clinical Global Impression[23]	X*									X				X			X	X	X	X
Motor Assessments[24]	X													X			X	X[27]	X[27]	X[27]
BAER/VER/SSEP[26]	X													X			X	X[27]		
CBC with auto-differential[4]	X				X	X	X	X	X	X	X	X	X	X			X	X[27]	X[27]	X[27]
Comprehensive metabolic panel [4]	X				X	X	X	X	X	X	X	X	X	X			X	X[27]	X[27]	X[27]
CRP	X				X	X	X	X	X	X	X	X	X	X			X	X[27]	X[27]	X[27]
GGT – AN due to elevated liver enzymes	AN				AN	AN	AN	AN	AN	AN	AN	AN	AN	AN			AN	AN	AN	AN
PT, PTT, INR, Blood Typing[4]				X																
CD 19, 20 count		X	X	X		AN				X		X		X			X	X[27]	AN	AN
IgA level			X																	
IgG levels [6]				X						X		X		X			X	AN	AN	AN

Table 14: Schedule of Juvenile-Onset Participant Assessments (Continued)

Schedule of Activities	Visit A	Visit B	Visit C	Visit D	Visit 1a	Visit 1b	Visit 2	Visit 3	Visit 4	Visit 5	Visit 6	Visit 7	Visit 8	Visit 9	Visit 10	Visit 11	Visit 12	Visit 13	Visit 14	Visit 15
	Week - 8	Day -16	Day -7	Day -2	Day 1	Day 2	Day 8	Day 15	Day 22	Week 4	Week 6	Week 8	Week 10	Week 12	Week 16	Week 20	Week 24	Week 48	Week 72	Week 96
	±28d	±5d	±3d	±1d	-	-	±1d	±3d	±3d	±3d	±4d	±5d	±4d	±7d	±7d	±7d	±7d	±7d	±7d	±7d
Total hemolytic complement (CH50) – AN due to platelet count decrease[4]	X				AN	AN	AN	AN	AN	AN	AN	AN	AN	AN			AN	AN	AN	AN
Infectious disease testing – As clinically indicated based on Medical History[5]		AN																		
Research blood collection [7]		X		X			X	X	X	X	X	X	X	X			X	X[27]	X[27]	X[27]
Anti-AAVrh8 antibodies (ADA)[7]		X		X			X	X	X	X	X	X	X	X			X	X[27]	X[27]	X[27]
Transgene antibodies (ADA)[7]		X		X			X	X	X	X	X	X	X	X			X	X[27]	X[27]	X[27]
Neutralizing antibodies (Nabs)[7]		X		X			X	X	X	X	X	X	X	X			X	X[27]	X[27]	X[27]
GM2 ganglioside levels (serum)[7]		X		X			X	X	X	X	X	X	X	X			X	X[27]	X[27]	X[27]
ELISpot		X		AN			X	X	X	X	X	X	X	X			X	X[27]	X[27]	X[27]
Chest X-ray		X																		
Swallow Study[25]		X												X			X	X[27]		X[27]
ECG		X			AN		AN	AN	AN	AN	AN	AN	AN	X			AN	X[27]	AN	X[27]
EEG [8]		X							X											
Echocardiogram [9]		X																		
Pre-Surgical MRI [10] / CT			X																	
Intra-surgical CT scan					X															
Post-Surgical MRI					X															
MRI, MRS, DTI [11]	X													X			X	X[27]	X[27]	
Surgical readiness determination		X																		
Central Venous Catheter placement [12]		AN	AN	AN																
Rituximab infusion [13]			X	AN																
Solu-Medrol infusion [14]			X																	
Sirolimus [15]			X	X	X	X	X	X	X	X	X	X	X	X	X	X	wean			
Prednisolone [16]			X	X	X	X	X	X	X	X	X	X	X	X, taper	X, taper					

Table 14: Schedule of Juvenile-Onset Participant Assessments (Continued)

Schedule of Activities	Visit A	Visit B	Visit C	Visit D	Visit 1a	Visit 1b	Visit 2	Visit 3	Visit 4	Visit 5	Visit 6	Visit 7	Visit 8	Visit 9	Visit 10	Visit 11	Visit 12	Visit 13	Visit 14	Visit 15
	Week - 8	Day -16	Day -7	Day -2	Day 1	Day 2	Day 8	Day 15	Day 22	Week 4	Week 6	Week 8	Week 10	Week 12	Week 16	Week 20	Week 24	Week 48	Week 72	Week 96
	±28d	±5d	±3d	±1d	-	-	±1d	±3d	±3d	±3d	±4d	±5d	±4d	±7d	±7d	±7d	±7d	±7d	±7d	±7d
Trimethoprim/sulfamethoxazole [17]			X	X	X	X	X	X	X	X	X	X	X	X	X	X	X			
Lansoprazole [18]			X	X	X	X	X	X	X	X	X	X	X	X						
IVIG administration [19]						AN				AN	AN	AN	AN	AN			AN			
Bilat Intrathalamic Infusion					X															
Intrathecal Infusion						X														
LP CSF collection [20]	X					X								X			X	X[27]	X[27]	X[27]
CSF HexA activity level, GM2 ganglioside	X					X								X			X	X[27]	X[27]	X[27]
Sirolimus levels			AN	X	X	AN	X	X	X	X	X	X	X	X			AN			
Anti-seizure drug levels [21]		AN	AN	AN	AN	AN	AN	AN	AN	AN	AN	AN	AN	AN	AN	AN	AN	AN	AN	AN
Adverse Events review		X	X	X	X	X	X	X	X	X	X	X	X	X	X	X	X	X	X	X
Concomitant medication review		X	X	X	X	X	X	X	X	X	X	X	X	X	X	X	X	X	X	X

Footnotes:

* Enrollment of Participants will be done at staggered 4-week intervals, based on satisfactory DSMC and Sponsor review of 4-week safety data. The screening activities marked with an asterisk may be performed prior to DSMC data review conclusion. All other assessments must not be performed prior to DSMC/Sponsor review and approval to enroll the next participant.

* Blue Indicates this occurs at Massachusetts General Hospital, Red indicates it occurs at UMass Chan Medical School

1. Verification of *HEXA* or *HEXB* gene mutation and modifiers by reports
2. Measurements include systolic and diastolic blood pressure, pulse rate per minute, respiratory rate per minute, and temperature
3. Comprehensive exam or limited exam at the discretion of the clinician based on status of the participants. Exams may be videotaped. For Visit 1b (Day 2), perform neurologic checks every 2h for the first 24h, and full physical and neurological exam 24h, 48h, and 72h post infusion.
4. Safety labs will be prioritized based on the participant's conditions at the discretion of the investigator. Additional safety labs may be required for participant management. Safety labs include the following: CBC with auto-differential and comprehensive metabolic panel, AST, ALT, ALP repeated as needed if 2X baseline, ELISpot. A CH50 may also be performed as clinically indicated, i.e., platelet count decrease. Additionally, PT, PTT, and INR will be assessed prior to surgery.
5. Infectious disease testing will be performed as clinically indicated (i.e., based on Medical History) and will include HIV, hepatitis A, B and C, herpes simplex virus, cytomegalovirus, Epstein Barr virus, varicella zoster virus, and toxoplasmosis
6. IgG levels to be done at least 3 days prior to the scheduled visit, at a local lab as necessary. Performed as needed at month 6, contingent on results from month 3
7. Blood will be collected for research as tolerated by the participant and will be frozen for later use or used for the isolation of serum or PBMCs. The amount of research blood collected, and its intended use, will vary between visits based on the overall volume of blood collected within a 1-week period remaining < 10 mL. Sample prioritization will be determined by investigator and Sponsor if collected blood volume is limited. Collect blood on Visit B (Day -16) prior to immunosuppression. Blood collected for research can include anti-AAVrh8 antibodies (ADA), transgene antibodies (ADA) and neutralizing antibodies (Nabs) if needed. The priority should be the antibodies followed by the serum HEXA activity and then GM2 ganglioside levels in serum.

Table 14: Schedule of Juvenile-Onset Participant Assessments (Continued)

8. 1hr or 24hr EEG at the discretion of the clinician based on participant status
9. Echocardiogram report within 3 months of screening is acceptable
10. To be used by neurosurgeon for thalamic target navigation planning. Scan should include brain and spinal cord. Scans may be obtained up to 14 days prior to surgery to allow adequate planning and preparation time.
11. To be reviewed by study neurosurgeon as part of surgical readiness determination.
12. Caregivers will have option to have a central venous catheter inserted into participants prior to surgical gene transfer to ensure venous access and reduce difficulty and pain associate with blood draws during the study
13. Rituximab IV infusion at 375 mg/m^2 body surface area (BSA). As needed at Day -2 for persistent CD20 count greater than or equal to 5%
14. Solu-Medrol IV infusion at 10 mg/kg
15. Sirolimus oral at 1.5 mg/m^2 BSA; Adjust dose to achieve serum trough levels of 7-12 ng/mL as needed. To be weaned starting Visit 12/Week 24 according to the following regimen: Week 24-25: reduce dose by 50%; Week 25-26: reduce Week 24-25 dose by 50%; Week 26-27: reduce Week 25-26 dose by 50% then stop
16. Prednisolone 1-2 mg/kg/day, to be tapered starting Visit 9/Week 12 according to the following regimen: Week 12-13: reduce dose by 50%; Week 13-14: reduce week 12-13 dose by 50%; Week 14-15: reduce week 13-14 dose by 50%; Week 15-16: reduce week 13-14 dose by 50% then stop.
17. The dose of trimethoprim/sulfamethoxazole should be 2.5 mg/kg/day BID on 2 consecutive days per week (PO or by feeding tube) or per PI discretion, to be discontinued following completion of sirolimus wean.
18. Lansoprazole suspension of 1 to 1.5 mg/kg/day PO, to be discontinued following completion of prednisolone tapering.
19. IVIG administration 1 gm/kg (1000 mg/kg) if IgG levels < 500 mL/dL. Dose adjusted to maintain serum trough levels of 500-1000 mg/dL after vector infusion. On Day 1, IVIG administration will occur later in the day, after treatment infusion has completed.
20. Divided between clinical and research analyses. Visit 1b (Day -2) CSF collection should be pre-administration.
21. Anti-seizure drug levels will be assessed as needed after Day -2
22. Appropriate neuro-cognitive assessments will be determined for each participant. We expect all participants will be assessed via the Vineland 3. Available additional juvenile assessments include the Wechsler, WPPSI, BSID-III depending on the participant's age and capabilities.
23. CGI-S will be administered at Visit A. CGI-I will be administered at Visits 5, 9, 12, 13, 14, and 15. All neuro-cognitive assessments with the exception of the Vineland 3 should be videotaped.
24. Juvenile motor assessments and motor classifications include the GMFM-88, GMFC-MLD, 9 Hole Peg Test, Timed Motor Function Tests (10 Meter Walk/Run, Time to Rise From Floor, Time Up 4 Stairs), MACs. All motor assessments with the exception of the MACs should be videotaped.
25. Participants must have a swallow evaluation test performed within 6 months prior to AXO-AAV-GM2 administration to assess the risk of aspiration. If aspiration risk is identified, it must be clinically managed prior to surgical procedures. Participants must have a swallow evaluation test performed at baseline and a clinical assessment of swallowing and a swallow study, if warranted, at Visit 9 (Week 12), Visit 12 (Week 24), Visit 13 (Week 48), Visit 15 (Week 96) and yearly thereafter for Years 3-5 (see Table 16).
26. BAER/VER/SSEP should be conducted without sedation or a prolongation of, or another episode of general anesthesia.
27. May be completed if visit occurs in person however not if the visit is completed as a tele-health
28. Tele-health will occur if Pt does not come to site in person

AN – As Needed

Table 15: Schedule of Infantile-Onset Participant Assessments

Schedule of Activities	Visit A	Visit B	Visit C	Visit D	Visit 1a	Visit 1b	Visit 2	Visit 3	Visit 4	Visit 5	Visit 6	Visit 7	Visit 8	Visit 9	Visit 10	Visit 11	Visit 12	Visit 13
	Week - 8	Day -16	Day -7	Day -2	Day 1	Day 2	Day 8	Day 15	Day 22	Week 4	Week 6	Week 8	Week 10	Week 12	Week 16	Week 20	Week 24	Week 48
	±28d	±5d	±3d	±1d	-	-	±1d	±3d	±3d	±3d	±4d	±5d	±4d	±7d	±7d	±7d	±7d	±7d
ICF	X*	X																
Inclusion/Exclusion Criteria	X*	X																
Genetic Confirmation [1]	X*																	
Vital Signs [11]	X*	X	X	X	X	X	X	X	X	X	X	X	X	X			X	X[23]
Weight	X*	X	X	X			X	X	X	X	X	X	X	X			X	X[23]
Height	X*	X	X											X			X	X[23]
Physical Examination	X*	X		X	X	X	X	X	X	X	X	X	X	X			X	X[23]
Neurologic Examination[12]	X*			X		X	X	X	X	X	X	X	X	X			X	X[23]
Tele-health follow-up															X	X		X[24]
Tele-health Neuro Exam																		X[24]
Ophthalmology Exam			X															
HINE-2	X*									X				X			X	X[23]
BSID-III	X*									X				X			X	X[23]
Clinical Global Impression	X*									X				X			X	X
CBC with auto-differential[6]	X				X	X	X	X	X	X	X	X	X	X			X	X[23]
Comprehensive metabolic panel[6]	X				X	X	X	X	X	X	X	X	X	X			X	X[23]
hsCRP	X				X	X	X	X	X	X	X	X	X	X			X	X[23]
GGT – AN due to elevated liver enzymes	AN				AN	AN	AN	AN	AN	AN	AN	AN	AN	AN			AN	AN
PT, PTT, INR, Blood Typing[6]				X														
Total hemolytic complement (CH50) – AN due to platelet count decrease[6]	AN				AN	AN	AN	AN	AN	AN	AN	AN	AN	AN			AN	AN
Serum HexA activity level	X					X			X	X		X		X			X	X[23]

Table 15: Schedule of Infantile-Onset Participant Assessments (Continued)

Schedule of Activities	Visit A	Visit B	Visit C	Visit D	Visit 1a	Visit 1b	Visit 2	Visit 3	Visit 4	Visit 5	Visit 6	Visit 7	Visit 8	Visit 9	Visit 10	Visit 11	Visit 12	Visit 13
	Week - 8	Day -16	Day -7	Day -2	Day 1	Day 2	Day 8	Day 15	Day 22	Week 4	Week 6	Week 8	Week 10	Week 12	Week 16	Week 20	Week 24	Week 48
	±28d	±5d	±3d	±1d	-	-	±1d	±3d	±3d	±3d	±4d	±5d	±4d	±7d	±7d	±7d	±7d	±7d
Sirolimus levels			AN	X	X	AN	X	X	X	X	X	X	X	X			AN	
Anti-seizure drug levels [7]		AN	AN	AN	AN	AN	AN	AN	AN	AN	AN	AN	AN	AN	AN	AN	AN	AN
CD 19, 20 count		X	X	X		AN				X		X		X			AN	AN
IgA level			X															
IgG levels [8]				X						X		X		X			AN	AN
Research blood collection [9]		X		X			X	X	X	X	X	X	X	X			X	X[23]
Anti-AAVrh8 antibodies (ADA)[9]		X		X			X	X	X	X	X	X	X	X			X	X[23]
Transgene antibodies (ADA)[9]		X		X			X	X	X	X	X	X	X	X			X	X[23]
Neutralizing antibodies (Nabs)[9]		X		X			X	X	X	X	X	X	X	X			X	X[23]
GM2 ganglioside levels (serum)[9]		X		X			X	X	X	X	X	X	X	X			X	X[23]
ELISpot		X		AN			X	X	X	X	X	X	X	X			X	X[23]
Infectious disease testing [10] – As clinically indicated based on Medical History		AN																
Urinalysis					X									AN			AN	AN
Chest X-ray		X																
Swallow Study[22]		X												X			X	X[23]
ECG		X			AN		AN	AN	AN	AN	AN	AN	AN	X			AN	X[23]
EEG [2]		X							X									
Echocardiogram [3]		X																
Pre-Surgical MRI /CT [4]			X															
Intra-surgical CT					X													

Table 15: Schedule of Infantile-Onset Participant Assessments (Continued)

Schedule of Activities	Visit A	Visit B	Visit C	Visit D	Visit 1a	Visit 1b	Visit 2	Visit 3	Visit 4	Visit 5	Visit 6	Visit 7	Visit 8	Visit 9	Visit 10	Visit 11	Visit 12	Visit 13
	Week - 8	Day -16	Day -7	Day -2	Day 1	Day 2	Day 8	Day 15	Day 22	Week 4	Week 6	Week 8	Week 10	Week 12	Week 16	Week 20	Week 24	Week 48
	±28d	±5d	±3d	±1d	-	-	±1d	±3d	±3d	±3d	±4d	±5d	±4d	±7d	±7d	±7d	±7d	±7d
Post-Surgical MRI					X													
MRI, MRS, DTI [5]	X													X			X	X[23]
Surgical readiness determination		X																
Central Venous Catheter placement [13]		AN	AN	AN														
Rituximab infusion [14]			X	AN														
Solu-Medrol infusion [15]			X															
Sirolimus [16]			X	X	X	X	X	X	X	X	X	X	X	X	X	X	wean	
Prednisolone [17]			X	X	X	X	X	X	X	X	X	X	X	X, taper	X, taper			
Trimethoprim/sulfamethoxazole [18]			X	X	X	X	X	X	X	X	X	X	X	X	X	X	X	
Lansoprazole [19]			X	X	X	X	X	X	X	X	X	X	X	X				
IVIG administration [20]						AN				AN	AN	AN	AN	AN			AN	
Bilat Intrathalamic Infusion					X													
Intrathecal Infusion						X												
LP CSF collection [21]	X					X								X			X	X[23]
CSF HexA activity level, GM2 ganglioside	X					X								X			X	X[23]
Adverse Events review		X	X	X	X	X	X	X	X	X	X	X	X	X	X	X	X	X
Concomitant medication review		X	X	X	X	X	X	X	X	X	X	X	X	X	X	X	X	X

Footnotes:

* Enrollment of Participants will be done at staggered 4-week intervals, based on satisfactory DSMC and Sponsor review of 4-week safety data. The screening activities marked with an asterisk may be performed prior to DSMC data review conclusion of prior participants. All other assessments must not be performed prior to DSMC/Sponsor review and approval to enroll the next participant.

* Blue Indicates this occurs at Massachusetts General Hospital, Red indicates it occurs at UMass Chan Medical School

1. Verification of *HEXA* or *HEXB* gene mutation and modifiers by reports
2. 1hr or 24hr EEG at the discretion of the clinician based on the status of the participants
3. Echocardiogram report within 3 months of screening is acceptable.
4. To be used by neurosurgeon for thalamic target navigation planning. Scan should include brain and spinal cord. Scan may be obtained up to 14 days prior to surgery to allow for adequate time for planning and preparation.
5. To be reviewed by study neurosurgeon as part of surgical readiness determination.
6. Safety labs will be prioritized based on the participant's condition at the discretion of the investigator. Additional safety labs may be required for participant management. Safety labs include the following: CBC with auto-differential and comprehensive metabolic panel, AST, ALT, ALP repeated as needed if 2X baseline, ELISpot. A CH50 may also be performed as clinically indicated, i.e., platelet count decrease. Additionally, PT, PTT, and INR will be assessed prior to surgery.
7. Will be assessed as needed after Day -2
8. IgG levels to be done at least 3 days prior to the scheduled visit, at a local lab as necessary. Performed as needed at month 6, contingent on results from month 3
9. Blood will be collected for research as tolerated by the participant and will be frozen for later use or used for the isolation of serum or PBMCs. The amount of research blood collected, and its intended use, will vary between visits based on the overall volume of blood collected within a 1-week period remaining < 10 mL. Sample prioritization will be determined by investigator and Sponsor if collected blood volume is limited. Collect blood on Visit B (Day -16) prior to immunosuppression.. Blood collected for research can include anti-AAVrh8 antibodies (ADA), transgene antibodies (ADA) and neutralizing antibodies (Nabs) if needed. The priority should be the antibodies followed by the serum HEXA activity and then GM2 ganglioside levels in serum.
10. Infectious disease testing will be performed as clinically indicated (i.e., based on Medical History) and will include HIV, hepatitis A, B and C, herpes simplex virus, cytomegalovirus, Epstein Barr virus, varicella zoster virus, and toxoplasmosis
11. Measurements include systolic and diastolic blood pressure, pulse rate per minute, respiratory rate per minute, and temperature
12. Comprehensive exam or limited exam at the discretion of the clinician based on participant's status. Exams may be videotaped. For Visit 1b (Day 2), perform neurologic checks every 2h for the first 24h, and full physical and neurological exam 24h, 48h, and 72h post infusion while inpatient.
13. Caregivers will have option to have central venous catheter inserted into participants prior to surgical gene transfer to ensure venous access and reduce difficulty and pain associate with blood draws during the study
14. Rituximab IV infusion at 375 mg/m^2 body surface area (BSA). As needed at Day -2 for persistent CD20 count greater than or equal to 5%
15. Solu-Medrol IV infusion at 10 mg/kg
16. Sirolimus oral at 1.5 mg/m^2 BSA; Adjust dose to achieve serum trough levels of 7-12 ng/mL as needed. To be weaned starting Visit 12/Week 24 according to the following regimen: Week 24-25: reduce dose by 50%; Week 25-26: reduce Week 24-25 dose by 50%; Week 26-27: reduce Week 25-26 dose by 50% then stop
17. Prednisolone 1-2 mg/kg/day, to be tapered starting Visit 9/Week 12 according to the following regimen: Week 12-13: reduce dose by 50%; Week 13-14: reduce week 12-13 dose by 50%; Week 14-15: reduce week 13-14 dose by 50%; Week 15-16: reduce week 13-14 dose by 50% then stop.
18. The dose of trimethoprim/sulfamethoxazole 2.5 mg/kg/day BID on 2 consecutive days per week (PO or by feeding tube) or per PI discretion, to be discontinued following completion of sirolimus wean.
19. Lansoprazole suspension of 1 to 1.5 mg/kg/day PO, to be discontinued following completion of prednisolone tapering.
20. IVIG administration 1 gm/kg (1000 mg/kg) if IgG levels < 500 mL/dL. Dose adjusted to maintain serum trough levels of 500-1000 mg/dL after vector infusion. On Day 1, IVIG administration will occur later in the day, after treatment infusion has completed.
21. Divided between clinical and research analyses. Visit 1b (Day -2) CSF collection should be pre-administration.
22. Participants must have a swallow evaluation test performed within 6 months prior to AXO-AAV-GM2 administration to assess risk of aspiration. If aspiration risk is identified, it must be clinically managed prior to surgical procedures. Participants must have a swallow evaluation test performed at baseline and a clinical assessment of swallowing and a swallow study, if warranted, at Visit 9 (Week 12), Visit 12 (Week 24), Visit 13 (Week 48), and yearly thereafter for Years 2-5 (see Table 17).
23. May be completed if visit occurs in person however not if the visit is completed as a tele-health
24. Tele-health will occur if Pt does not come to site in person

AN – As Needed

Table 16: Schedule of Juvenile-Onset Participant LTFU

Schedule of Activities	Visit 16	Visit 17	Visit 18	Visit 19	Visit 20
	Week 120	Week 144	Week 168	Week 192	Week 240
	±28d	±28d	±28d	±28d	±28d
Vital Signs	X[1]	X[1]	X[1]	X[1]	X[1]
Weight	X[1]	X[1]	X[1]	X[1]	X[1]
Height	X[1]	X[1]	X[1]	X[1]	X[1]
Physical Examination	X[1]	X[1]	X[1]	X[1]	X[1]
Neurologic Examination (may be videotaped)	X[1]	X[1]	X[1]	X[1]	X[1]
Tele-health follow-up	X[2]	X[2]	X[2]	X[2]	X[2]
Participant Appropriate Neuro-Cognitive Assessments		X[1]		X[1]	X[1]
Clinical Global Impression		X[1]		X[1]	X[1]
Motor Assessments		X[1]		X[1]	X[1]
BAER/VER/SSEP		X[1]			
MRI, MRS, DTI		X[1]		X[1]	X[1]
CBC with auto-differential	X[1]	X[1]	X[1]	X[1]	X[1]
Comprehensive metabolic profile	X[1]	X[1]	X[1]	X[1]	X[1]
CH50 – AN due to platelet count decrease	AN	AN	AN	AN	AN
CSF HexA activity level, GM2 ganglioside		X[1]		X[1]	X[1]
CD 19, 20 count	AN	AN	AN	AN	AN
IgG levels	AN	AN	AN	AN	AN
Research blood collection	X[1]	X[1]	X[1]	X[1]	X[1]
Anti-AAVrh8 antibodies (ADA)	X[1]	X[1]	X[1]	X[1]	X[1]
Transgene antibodies (ADA)	X[1]	X[1]	X[1]	X[1]	X[1]
Neutralizing antibodies (Nabs)	X[1]	X[1]	X[1]	X[1]	X[1]
Serum HexA activity levels	X[1]	X[1]	X[1]	X[1]	X[1]
Serum GM2 ganglioside levels	X[1]	X[1]	X[1]	X[1]	X[1]
ELISpot	X[1]	X[1]	X[1]	X[1]	X[1]
Swallow Study		X[1]		X[1]	X[1]
Adverse Events review	X	X	X	X	X

Table 16: Schedule of Juvenile-Onset Participant LTFU (Continued)

Schedule of Activities	Visit 16	Visit 17	Visit 18	Visit 19	Visit 20
	Week 120	Week 144	Week 168	Week 192	Week 240
	±28d	±28d	±28d	±28d	±28d
Concomitant medication review	X	X	X	X	X
Urinalysis		AN		AN	AN

AN – As Needed

1. May be completed if visit occurs in person however not if the visit is completed as a tele-health
2. Tele-health will occur if Pt does not come to site in person

Table 17: Schedule of Infantile-Onset Participant LTFU

Schedule of Activities	**Visit 14**	**Visit 15**	**Visit 16**	**Visit 17**	**Visit 18**	**Visit 19**	**Visit 20**
	Week 72	Week 96	Week 120	Week 144	Week 168	Week 192	Week 240
	±28d	±28d	±28d	±28d	±28d	±28d	±28d
Vital Signs	X[1]	X[1]	X[1]	X[1]	X[1]	X[1]	X[1]
Weight	X[1]	X[1]	X[1]	X[1]	X[1]	X[1]	X[1]
Height	X[1]	X[1]	X[1]	X[1]	X[1]	X[1]	X[1]
Physical Examination	X[1]	X[1]	X[1]	X[1]	X[1]	X[1]	X[1]
Neurologic Examination	X[1]	X[1]	X[1]	X[1]	X[1]	X[1]	X[1]
Tele-health Follow-up	X[2]	X[2]	X[2]	X[2]	X[2]	X[2]	X[2]
HINE-2	X[1]	X[1]	X[1]	X[1]	X[1]	X[1]	X[1]
BSID-III	X[1]	X[1]	X[1]	X[1]	X[1]	X[1]	X[1]
Vineland 3	X[1]	X[1]	X[1]	X[1]	X[1]	X[1]	X[1]
MRI, MRS, DTI		X[1]		X[1]			X[1]
BAER/VER/SSEP				X[1]			
Clinical Global Impression	X[1]	X[1]	X[1]	X[1]	X[1]	X[1]	X[1]
CBC with auto-differential	X[1]	X[1]	X[1]	X[1]	X[1]	X[1]	X[1]
Comprehensive metabolic panel	X[1]	X[1]	X[1]	X[1]	X[1]	X[1]	X[1]
CH50 – AN due to platelet count decrease	X[1]	X[1]	X[1]	X[1]	X[1]	X[1]	X[1]
CSF HexA activity level, GM2 ganglioside		X[1]		X[1]		X[1]	X[1]
CD 19, 20 count	AN	AN	AN	AN	AN	AN	AN
IgG levels	X[1]	X[1]	X[1]	X[1]	X[1]	X[1]	X[1]

Table 17: Schedule of Infantile-Onset Participant LTFU (Continued)

Schedule of Activities	Visit 14	Visit 15	Visit 16	Visit 17	Visit 18	Visit 19	Visit 20
	Week 72	Week 96	Week 120	Week 144	Week 168	Week 192	Week 240
	±28d	±28d	±28d	±28d	±28d	±28d	±28d
Research blood collection	X[1]	X[1]	X[1]	X[1]	X[1]	X[1]	X[1]
Anti-AAVrh8 antibodies (ADA)	X[1]	X[1]	X[1]	X[1]	X[1]	X[1]	X[1]
Transgene antibodies (ADA)	X[1]	X[1]	X[1]	X[1]	X[1]	X[1]	X[1]
Neutralizing antibodies (Nabs)	X[1]	X[1]	X[1]	X[1]	X[1]	X[1]	X[1]
Serum HexA activity level	X[1]	X[1]	X[1]	X[1]	X[1]	X[1]	X[1]
Serum GM2 ganglioside level	X[1]	X[1]	X[1]	X[1]	X[1]	X[1]	X[1]
ELISpot	X[1]	X[1]	X[1]	X[1]	X[1]	X[1]	X[1]
Swallow Study		X[1]		X[1]		X[1]	X[1]
Adverse Events review	X	X	X	X	X	X	X
Concomitant medication review	X	X	X	X	X	X	X
Urinalysis	AN	AN		AN		AN	AN

AN – As Needed.

1. May be completed if visit occurs in person however not if the visit is completed as a tele-health
2. Tele-health will occur if Pt does not come to site in person

9. SELECTION AND WITHDRAWAL OF PARTICIPANTS

In order to reduce participant burden and aid in the participant selection process, screening may be initiated by a virtual visit with the study staff prior to traveling to the study site. During the virtual visit, study staff will conduct a preliminary assessment of participant eligibility. The parent(s)/caregiver(s) will be asked about the participant's medical history and may be asked to help in demonstrating the participant's functional ability. This virtual visit may be video recorded.

9.1. Participant Inclusion Criteria

1. Male or female participants with genetically diagnosed TSD or SD mutations of either *HEXA* gene or *HEXB* gene
   a. Stage 1 juvenile-onset participants must be ≥ 2 years old and ≤ 12 years old at time of gene transfer
      ii. Diagnosis consistent with juvenile-onset TSD or SD
   c. Stage 1 infantile-onset participants must be between ≥ 6 months and ≤ 20 months of age at the time of gene transfer
      i. Diagnosis consistent with infantile-onset TSD or SD

2. Juvenile onset participants must demonstrate a minimum of 2 of the following age-appropriate clinical features/abilities, confirmed by the site examiner at the time of screening and reaffirmed prior to the initiation of immunosuppression:
   a. A Gross Motor Function Classification-MLD (GMFC-MLD) score of 0, 1 or 2. The minimum gross motor function (GMFC-MLD level 2) is the 'ability to walk with support and walking without support is not possible (fewer than 5 steps)'. (Participants aged 2-12 years) Note: Any form of support is permitted; however, the participant must initiate each step and complete it for a total of 5 steps.
   b. Fine Motor Function
      - For Participants aged 4-12 years: A Manual Ability Classification System (MACS) score of I, II, III, or IV. The minimum level of manual ability (level IV) corresponds to 'Handles a limited selection of easily managed objects in adapted situations'.
      - For participants aged 2-4 years**:** attainment of fine motor function/coordination abilities and milestones with normal or a reduced quality of performance. That is, the ability to coordinate fingers and both hands to play, such as swinging a bat or opening a container (pathways.org) OR the ability to use fingertips to pick up small objects, i.e., the child uses pad of his/her thumb and any fingertip to grasp a pellet or small object as described in BSID III Fine Motor Sub-test Item #26. .
   c. Speech:
      - For participants aged 4-12 years, a speech disturbance score of 0, 1, 2 or 3 on the speech disturbance subset of the Scale for Assessment and Rating of Ataxia

(SARA). The minimum speech requirement is a speech disturbance in which most words can be understood, with occasional words difficult to understand secondary to dysarthria.

- Participants aged 2-4 years who have attained the communication milestone of ability to consistently use 2-3 word phrases may be assessed in line with this criterion using the speech disturbance subset of the SARA.
- For participants aged 2-4 years who have not yet attained the above communication milestone, the minimum requirement is the ability to imitate at least one word, even if the imitation consists of vowels only (BSID III, expressive communication subtest, item #16)

3. Infantile onset participants must demonstrate current* or historical† ability to sit without support for at least 5 seconds

   * As assessed in item 22 of the BSID-III Gross Motor Scale or documented medical records

   † Documented within available medical records

   In addition, infantile onset participants must demonstrate a **minimum of 3** of the following developmental skills confirmed by the site examiner at the time of screening and reaffirmed prior to the initiation of immunosuppression:

   a. Head control - While supine, with head in midline turns head symmetrically (score of 3 on GMFM item 1)
   b. Uses hands to support self while sitting
   c. Reach for an object that is held out for them above their chest while supine
   d. Transfer of object from hand to hand while supine
   e. Eye tracking while supine
   f. Looks at an object of interest for at least 3 continuous seconds

4. Surgical readiness for gene transfer route of administration confirmed by the study neurosurgeon, based on examination and MRI findings

   The following findings will disallow the performance of the BiTh procedure, thereby excluding the participant from participation:

   - Any scalp and skull related lesion (e.g. vascular, infectious) over the surgical entry area
   - Any intracranial lesion (e.g. vascular, cystic, other mass lesions), significant immaturity, or deformity of the brain anatomy that would make the intended surgical trajectory high risk

   The following findings will disallow the performance of the ICM/IT procedure, thereby excluding the participant from participation:

   - Any skin related lesion (e.g. vascular, infectious) over the lumbar puncture site
   - Any intraspinal or intracranial lesion in posterior fossa (e.g. vascular, cystic, other mass lesions) or significantly deformed, distorted brain, spinal and cisternal anatomy that make the intended intrathecal trajectory high risk or not feasible

Participants otherwise eligible for study participation but deemed not currently fit for neurosurgery may be re-screened at the discretion of the investigator

5. Participants receiving off-label miglustat and/or Tanganil must be willing to discontinue these therapies 30 days prior to the start of screening
6. Ability to reliably travel to the study sites for study visits according to the Schedule of Assessments

9.2. Participant Exclusion Criteria

1. Presence of G269S or W474C mutation in HEXA
2. Evidence of lower respiratory tract aspiration not easily manageable with thickening of feedings or substitution of a modified bottle nipple, as judged on a multi-texture contrast swallow.
3. History of multiple aspiration pneumonias occurring in the past twelve months.
4. Respiratory support in the form of ventilation (invasive or non-invasive).
5. History of drug-resistant seizures or status epilepticus
6. History and/or findings of spinal cord disease that would preclude the LP and ICM/IT infusion procedures including:
    - Infectious process involving the spinal canal which may cause adhesions or septations in the spinal and/or subarachnoid space
    - Previous spinal surgeries
    - History of trauma, bleeding in the spinal canal
    - Vascular or cystic lesions, or any other mass lesion
    - Congenital deformities and malformations involving the spinal canal
    - Posterior fossa findings (low lying cerebellar tonsils, crowded foramen magnum, small or absent cisterna magna)
7. The participant's parent(s) or legal guardian(s) is unable to understand the nature, scope, and possible consequences of the study, or does not agree to comply with the protocol defined schedule of assessments
8. Any prior participation in a study in which a gene therapy vector or stem cell transplantation was administered
9. Immunizations of any kind in the month prior to screening
10. Cardiomyopathy or other cardiac disease (based on echocardiogram and/or ECG) that in the opinion of the Investigator would deem the participant unsafe to undergo surgical gene transfer
11. Indwelling ferromagnetic devices that would preclude MRI/ /MRS/DTI imaging
12. Ongoing medical condition that is deemed by the Investigator to interfere with the conduct or assessments of the study

13. Current clinically significant infections including any requiring systemic treatment including but not limited to human immunodeficiency virus (HIV), Hepatitis A, B, or C
14. History of or current chemotherapy, radiotherapy or other immunosuppressive therapy within the past 30 days. corticosteroid treatment may be permitted at the discretion of the PI
15. Clinically significant laboratory abnormalities:

    Based on age-specific reference range and determined by the investigator

    - Total WBC count
    - Hemoglobin
    - Creatinine
    - Pancreatic enzymes

    Based on the following thresholds

    - Platelet count (< 150,000/µL)
    - Prothrombin (PT), partial thromboplastin time (PTT) >2X normal
    - Liver transaminases (Hy's Law: > 3x elevations above the ULN of ALT or AST and serum total bilirubin > 2xULN)
16. Participants for whom any of the proposed study procedures or medications (i.e. sirolimus, trimethoprim/sulfamethoxazole) would be contraindicated
17. Failure to thrive, defined as falling 20 percentiles (20/100) in body weight in the 3 months preceding Screening/Baseline
18. Participant is not suitable for participation in the study in the opinion of the Principal Investigator

9.3. Participant Withdrawal Criteria

Since AXO-AAV-GM2 is a one-time administration, withdrawal of therapy is not possible.

9.4. Study Stopping Criteria

Temporary suspension of enrollment and administration of AXO-AAV-GM2 to study participants will result if any of the following occur in the study:

1. Death of any participant in which the cause of death is assessed by the investigator as at least possibly related to the AXO-AAV-GM2 or the neurosurgical administration procedure.
2. Intracranial hemorrhage related to the BiTh procedure or an event suggestive of or consistent with craniospinal herniation related to the ICM/IT procedure.
3. Two or more CTCAE Grade 3 or higher adverse events in any participant that are assessed by the investigator as possibly, probably or definitely related to AXO-AAV-GM2 or the neurosurgical administration procedure

4. An SAE in any participant where the event is assessed by the investigator as possibly, probably or definitely related to AXO-AAV-GM2 or the neurosurgical administration procedure

The DSMC will review all available safety data for AXO-AAV-GM2 and the neurosurgical administration/infusion procedures and will make recommendation(s) regarding further study conduct. The DSMC may make a recommendation regarding dose de-escalation/escalation. The clinical study may resume after appropriate steps are taken to address these AEs, including revision of the clinical protocol. Any participants who have already received IMP and are currently in the study at the time study stopping criteria are met will continue to be followed-up, for safety and any signs of efficacy, per protocol.

10. TREATMENT OF PARTICIPANTS

10.1. Description of Study Drug

Table 18: Investigational Product

	Investigational Product	
Product Names: *	AXO-AAV-GM2	
Active Ingredients:	AAVrh8-*HEXA*	AAVrh8-*HEXB*
Dosage Form:	Solution (0.5mL vials)	Solution (0.5mL vials)
Concentration: **	4.32E+13 vg/mL	2.62E+13 vg/mL
Combined Vector:	Each vector is diluted together without the addition of any diluent to yield a final titer of 1.63E+13 vg/mL for each, *HEXA* and for *HEXB*, and a combined titer of 3.26E+13 vg/mL	
Formulation:	1.47mM KH_2PO_4, 8.06mM Na_2HPO_4-$7H_2O$, pH 7.1 ± 0.1, 137.93mM NaCl, 2.67mM KCl	1.47mM KH_2PO_4, 8.06mM Na_2HPO_4-$7H_2O$, pH 7.1 ± 0.1, 137.93mM NaCl, 2.67mM KCl
Route of Administration:	BiTh and ICM/IT	BiTh and ICM/IT
Physical Description:	The biologic product is a non-replicating, serotype rh8, single-stranded (ss) recombinant adeno-associated virus (rAAV) designated rAAVrh8-*HEXA*	The biologic product is a non-replicating, serotype rh8, single-stranded (ss) recombinant adeno-associated virus (rAAV) designated rAAVrh8-*HEXB*

* Study drug consists of two components, labeled and supplied in two separate vials as AAVrh8-CB-ci-HEXA and AAVrh8-CB-ci-HEXB as described in Section 11.1. AXO-AAV-GM2 refers to the combination of these two components into a single dose.

** Concentration is based on ddPCR titers measured for lots produced at Nationwide Children's Hospital (June 2019) that will be used for Stage 1 of the clinical trial.

10.2. Concomitant Medications

All prescription and over the counter medications (including herbal remedies) taken by the participant for 28 days prior to administration of immunosuppressive regimen will be recorded on the source document and eCRF. Concomitant medications taken by the participants during the LTFU period will also be recorded on the source documents/eCRF. The Investigator may prescribe additional medications during the study, as long as the prescribed medication is not prohibited by the protocol. In the event of an emergency, any required medications may be prescribed without prior approval, but the Medical Monitor or designee must be notified of the use of any contraindicated medications immediately thereafter. Any concomitant medications added or discontinued during the study will be recorded on the eCRF, including the start and end dates, as applicable.

Concurrent supportive care for TSD or SD will not be restricted with exception of exclusionary medications. Therapies considered necessary for the participant's well-being will be administered at the discretion of the investigator.

10.3. Treatment Compliance

Since AXO-AAV-GM2 is a one-time surgical administration, treatment compliance to gene therapy will not be assessed.

10.4. Randomization and Blinding

Stages 1 and 2 of the study have a single-arm, open label design. Randomization or blinding will not be performed.

11. STUDY DRUG MATERIALS AND MANAGEMENT

11.1. Study Drug

AXO-AAV-GM2 is a 1:1 formulation of two viral vectors, rAAVrh8-*HEXA* and rAAVrh8-*HEXB*, carrying different human transgenes. One of the vectors contains the human *HEXA* gene, encoding for the HexA α subunit, and the other contains the human *HEXB* gene, encoding for the HexA β subunit. Both vectors utilize a CBA promoter, a chimeric intron, BGH/SV40 polyA tail, and AAV serotype 2 inverted terminal repeats (ITR).

11.2. Study Drug Packaging and Labeling

Study drug will be supplied in polypropylene screw top 0.5 mL tubes (vials). Each vial will be filled with 0.5 mL of rAAVrh8-*HEXA* or rAAVrh8-*HEXB*. The vials are packed and stored in plastic cryoboxes. Both the vials and cryoboxes will be labeled in accordance with the requirements set by the FDA. The vial labels will each contain a unique identifier for ease of tracking.

11.3. Study Drug Storage

All study drug vials are to be stored in freezers at less than or equal to -60ºC. The freezers must be monitored daily and any deviation in temperature > -60˚C must be reported to the sponsor as soon as possible and prior to further clinical use of the study drug. The study drug must be stored in such a way that it cannot be mixed up or confused with any other medications.

11.4. Study Drug Preparation

All prescriptions for study drug are to be written by the site Principal Investigator . A separate prescription is needed for the BiTh and the ICM/IT procedures. The prescriptions for these procedures must be accompanied by the Dose Preparation Forms.

Preparation of both the BiTh and ICM/IT doses must be done in accordance with the Pharmacy Manual for the study, and all institutional SOPs and practices required for the handling of biologic and/or potentially hazardous materials. Preparation of the study drug must be performed by the Research Pharmacist or trained designee, who must be listed on the Site Delegation Log and be trained on the Pharmacy Manual. Because each full dose of study drug is comprised of two components (AAVrh8-HEXA and AAVrh8-HEXB), a second qualified and trained member of the study team must be present during the study drug preparation process and must verify quantity of each drug component used, and that all processes were followed. This person must also be listed on the Site Delegation Log and be trained the Pharmacy Manual.

11.5. AXO-AAV-GM2 Administration

The Surgical Manual will contain detailed specific instructions for administration of AXO-AAV-GM2 which will take place over two days beginning with BiTh procedure at Visit 1a and ICM/IT procedure at Visit 1b (See Table 14 and Table 15).

11.5.1. Stage 2 Dosing

The dose strategy for Stage 2 will be determined by Stage 1 safety and biomarker results.

11.6. Study Drug Accountability

Study drug accountability will be performed routinely by the Sponsor or Sponsor's representative. The site must maintain accurate and current records of all drug received, all drug used during the procedures (including back up drug), all drug remaining on site, and all drug destroyed if applicable.

11.7. Study Drug Handling and Disposal

Storage and dispensing of the study medication will be conducted in accordance with the Pharmacy Manual and the overview below.

AXO-AAV-GM2 is a frozen liquid formulation. Study drug must be inspected and inventoried upon receipt, and placed into appropriate storage conditions (≤-60°C), in a monitored, temperature-controlled freezer located within the hospital pharmacy, in accordance with site SOPs and procedures for GMO handling.

AXO-AAV-GM2 may only be used for the clinical trial for which it is indicated and must not be employed for any other clinical or non-clinical use.

12. ASSESSMENT OF EFFICACY

Assessment of efficacy within this study will include:

- CSF HexA activity and GM2 ganglioside level
- Serum HexA activity
- BSID-III
- HINE-2
- MRI
- DTI
- MRS
- BAER
- VER
- Clinical Global Impression
- Vineland-3
- Wechsler scale (Wechsler 5, WPPSI, etc)
- GMFM-88
- GMFC-MLD
- 9-Hole Peg Test
- The Pediatric Balance Scale
- Timed Motor Function Tests (10 Meter Walk/Run, Time to Rise from Floor, Time Up 4 Stairs)
- SSEP

Please see the Study Schedule of Events (Table 14 and Table 15) for the timing of these assessments.

Several assessments included in this study will be administered by raters trained in the administration of the assessment. To minimize variability, it is preferred that the same rater administer the same scale to the same participant throughout the study wherever possible, at the same time during the clinic visit.

13. SAFETY PARAMETERS

13.1. Vital Signs, Height, and Weight

Vital signs will be measured after the participant has been at rest. Measurements will include systolic and diastolic blood pressure, pulse rate per minute, respiratory rate per minute, and temperature. Height will be measured in centimeters as the length of the participant in the supine position. Weight will be recorded in kilograms.

A vital sign result should be reported as an AE if it meets any of the following criteria:

- Accompanied by clinical symptoms
- Results in a medical intervention or a change in concomitant therapy
- Clinically significant in the investigator's judgement

13.2. Physical Examination

Physical and neurological examinations will be performed per the Schedule of Events. The assessments included in the exams will be at the discretion of the clinician based on the status of the participant at the time of the assessment.

13.3. Electrocardiogram (ECG), Electroencephalogram (EEG)

A standard 12-lead ECG will be performed per the Schedule of Events and reviewed by a cardiologist. A copy of the tracings will be kept on site as part of the source documents.

A standard EEG will be performed and reviewed by a neurologist. Whether a 1hr or 24hr EEG is performed will be at the discretion of the neurologist.

13.4. Laboratory Assessments

Laboratory assessments for safety will be performed by the site's local laboratory, and all certification/qualification documentation will be on file in the TMF. A laboratory test result should be assessed as clinically significant or not clinically significant, and should be reported as an AE if it meets any of the following criteria:

- Accompanied by clinical symptoms
- Results in a medical intervention or a change in concomitant therapy
- Clinically significant in the investigator's judgement

If a clinically significant laboratory abnormality is a sign of a disease or syndrome (e.g., hemoglobin below the lower limit of normal associated with anemia), only the diagnosis should be recorded. If the abnormality is not a sign of a disease or syndrome, the abnormality itself should be recorded (e.g., low calcium).

13.4.1. Hematology

Hematology panel: complete blood count with auto-differential (hematocrit, hemoglobin, platelet count, RBC indices, total RBC, total WBC, and WBC differential)

13.4.2. Blood Chemistry

Blood chemistry: comprehensive metabolic panel, including albumin, albumin/globulin ratio (calculated), alkaline phosphatase, ALT, AST, BUN/Creatinine Ratio (calculated), Calcium, Carbon Dioxide, Chloride, Creatinine with GFR Estimated, Globulin (calculated), Glucose, Potassium, Sodium, Total Bilirubin, Total Protein, Blood Urea Nitrogen (BUN)

13.4.3. Urinalysis

Urinalysis by dipstick bag: bilirubin, blood, clarity, color, glucose, ketones, nitrite, pH, protein, specific gravity, urobilinogen and leukocyte esterase

13.4.4. Virus Serology

Infectious disease testing: hepatitis B, herpes simplex virus, cytomegalovirus, Epstein-Barr virus, varicella zoster virus, and toxoplasmosis.

13.4.5. CNS

- Anti-seizure drug levels
- Cerebral spinal fluid (CSF) assessments: color, appearance, WBC count, RBC count, glucose, protein

13.4.6. Immunology

- B-Cell count
- IgA levels, to determine if an IgA deficient immunoglobulin needs to be used during IVIG
- Quantitative serum IgG, for determining dosing of IVIG
- Blood collected for research can include anti-AAVrh8 antibodies (ADA), transgene antibodies (ADA) and neutralizing antibodies (Nabs) if needed.
- ELISpot for assessment of capsid and transgene antigen-specific interferon gamma producing T cells in human PBMCs

13.4.7. Vector Shedding

Viral shedding will be assessed in Stage 2; the matrices and time points will be added to the schedule of assessments via protocol amendment.

13.5. Chest X-Ray

Anteroposterior and lateral chest X-ray will be performed at the first visit (Day -16) and then only as clinically indicated.

13.6. Imaging: MRI, MRS, DTI

Magnetic resonance imaging (MRI), magnetic resonance spectroscopy (MRS). diffusion tensor imaging (DTI), and computerized tomography (CT) scans will be performed under general anesthesia (with or without intubation at discretion of investigator).

13.7. Ophthalmology

Complete ophthalmologic examination will be performed and documented by an ophthalmologic specialist.

13.8. Brainstem Auditory Evoked Response (BAER)

Standard BAER testing for auditory acuity will be documented.

13.9. Adverse and Serious Adverse Events

13.9.1. Definition of Adverse Events

13.9.1.1. Adverse Event (AE)

According to the International Conference of Harmonization (ICH) guideline for Good Clinical Practice, an AE is any untoward medical occurrence in a patient administered pharmaceutical product and which does not necessarily have a causal relationship with this treatment.

An AE can therefore be any of the following:

- Unfavorable and unintended sign (including an abnormal laboratory finding), symptom, or disease temporally associated with the use of a medicinal (investigational) product, whether or not considered related to the medicinal (investigational) product.
- Any new disease or exacerbation of an existing disease (a worsening in the character, frequency, or severity of a known condition)
- Recurrence of an intermittent medical condition (e.g., headache) no present at baseline
- Any deterioration or abnormality in a laboratory value or other clinical test (e.g., ECG, X-ray) that is associated with symptoms or leads to a change in the study treatment or concomitant treatment or discontinuation from the study drug
- Adverse events that are related to a protocol-mandated intervention, including those that occur prior to assignment of study treatment.

All AEs will be captured following the signing of the informed consent form.

13.9.1.2. Serious Adverse Event (SAE)

A serious adverse event is an AE occurring during any study phase (i.e., baseline, treatment, washout, or follow-up), and at any dose of the investigational product, comparator or placebo, that fulfils one or more of the following:

- Results in death
- It is immediately life-threatening
- It requires in-patient hospitalization or prolongation of existing hospitalization
- It results in persistent or significant disability or incapacity
- Results in a congenital abnormality or birth defect

- It is a significant medical event in the investigator's judgement (e.g., may jeopardize the participant or may require medical/surgical intervention to prevent one of the outcomes listed above).

All SAEs that occur following signing of the informed consent form, regardless of treatment arm, must be reported within 24 hours of the investigator becoming aware of the event.

13.9.1.3. Adverse Events of Special Interest (AESI)

Dose-limiting toxicities (DLTs) in this study are defined as adverse events of special interest (AESIs). The following AESIs are included specifically for AAV vector gene therapy delivered directly to the CNS by convection enhanced delivery

- Infusion-related reactions (adverse event occurring within 24 hours of gene therapy infusion)
- Neurosurgical related complications
- Type I Hypersensitivity Reaction
- Liver function test elevations: (Hy's Law) ≥3x elevations above the ULN of ALT or AST, serum total bilirubin >2xULN
- Thrombocytopenia defined as a platelet count <150,000/µL
- Delayed adverse events including but not limited to autoimmune-like reactions
- Malignancies

13.10. Relationship to Investigational Product, Study Procedure and Administration System

An Investigator who is qualified in medicine must make the determination of relationship between an AE and the investigational product received, study procedure and/or administration system (e.g., not related, unlikely related, possibly related, probably related, or definitely related). The Investigator should decide whether, in his or her medical judgment, there is a reasonable possibility that the event may have been caused by the investigational product, study procedure and/or administration system.

If there is any valid reason, even if undetermined, for suspecting a possible cause-and-effect relationship between the investigational product and the occurrence of the AE, then the AE should be considered "related."

If the relationship between the AE/SAE and the investigational product is determined to be "possible" or "probable" the event will be considered to be related to the investigational product for the purposes of expedited regulatory reporting.

When assessing a potential relationship between the investigational product, study procedure and/or administration system and an AE, the following parameters should be considered:

- Temporal relationship between the investigational product, surgical procedure and/or protocol-specified procedures and the AE
- The biological plausibility that the investigational product, study procedure and/or administration system caused the event

- Any underlying/concurrent illness in the participant
- Concomitant medications the participant may have received
- How commonly the event occurs in the study population independent of treatment

13.11. Recording Adverse Events

Adverse events spontaneously reported by the participant and/or in response to an open question from the study personnel or revealed by observation will be recorded during the study at the investigational site. Clinically significant changes in laboratory values, blood pressure, and pulse need not be reported as AEs. However, abnormal values that constitute an SAE or lead to discontinuation of administration of study drug must be reported and recorded as an AE. Information about AEs will be collected from the signing of consent until the end of the LTFU. Serious Adverse Event information will be collected from the signing of consent form until the end of the LTFU. The AE term should be reported in standard medical terminology when possible. For each AE, the investigator will evaluate and report the onset (date and time), resolution (date and time), intensity, causality, action taken, serious outcome (if applicable), and whether or not it caused the participant to discontinue the study.

AE intensity will be assessed according to NCI CTCAE v5.0.

It is important to distinguish between serious and severe AEs. Severity is a measure of intensity whereas seriousness is defined by the criteria under Section 13.9.1.2. An AE of severe intensity may not be considered serious.

13.12. Reporting Adverse Events

All SAEs (related and unrelated) occurring from the signing of consent form until the completion of the LTFU must be reported to the Sponsor or designee within 24 hours of the investigator's knowledge of the event. Any SAEs considered possibly or probably related to the investigational product and discovered by the Investigator at any time after the study should be reported. All SAEs must be reported to Dr. Terence Flotte within 24 hours of the first awareness of the event.
The Investigator must complete, sign and date the SAE pages, verify the accuracy of the information recorded on the SAE pages with the corresponding source documents, and send a copy by fax to Dr.Terence Flotte at UMass Chan Medical School.

Additional follow-up information, if required or available, should all be faxed to UMass Chan Medical School within one business day of receipt and this should be completed on a follow-up SAE form and placed with the original SAE information and kept with the appropriate section of the CRF and/or study file. All participants with a SAE must be followed up and the outcomes reported until the event has returned to baseline status or resolved.

SAE reporting will originate in the electronic data capture (EDC) system and an email will be sent to the designated responsible parties in Safety. The paper SAE form is in place as a back-up in the event that EDC is not accessible to the reported of the SAE:

- Terry.Flotte@umassmed.edu
- Provide copy of all relevant source documents, including medical history, hospital records and discharge summaries, and concomitant medication pages, as appropriate

UMass Chan Medical School is responsible for notifying the relevant regulatory authorities of certain events.

It is the Principal Investigator's responsibility to notify the IRB or IEC of all SAEs that occur at his or her site. Investigators will also be notified of all unexpected, serious, drug-related events (7-day and15-day Safety Reports) that occur during the clinical trial. Each site is responsible for notifying its IRB or IEC of 15-day or 7-day safety reports required by local regulations or IRB/IEC requirements and shall provide the sponsor or its designee with written confirmation of said IRB/IEC notification.

13.13. Reporting Device Deficiencies

Any deficiency in the AXO-AAV-GM2 administration system defined as an inadequacy with respect to identity, quality, durability, reliability, safety or performance which includes malfunctions, use errors, and inadequate labeling will be recorded in the eCRF and reported immediately to the sponsor and the equipment quarantined.

Device deficiencies that did not lead to an AE but could have led to a medial occurrence should also be reported (e.g.):

a. if suitable action had not been taken
b. if intervention had not been made, or
c. if circumstances had been less fortunate

The sponsor will review all device deficiencies and determine and document in writing whether they could have led to a serious adverse device effect (SADE) and report in accordance with regulations to all relevant parties.

14. STATISTICS

The statistical analysis methods for Stage 1 and Stage 2 will reflect the design elements and objectives of each Stage, with descriptive methods and data listings the primary methods used for the Stage 1 data, and with a focus on descriptive methods used for the Stage 2 data. Potential comparison of outcomes to external control data may be performed and will be described in the statistical analysis plan.

14.1. Sample Size

Stage 1: The objectives of Stage 1 is to evaluate safety and identify the dose to be used in Stage 2. A sample size of N=1 or 2 participants per dose, is expected to allow for differentiation of outcomes sufficient to select the 'better' dose. This determination is based on an understanding of the target indication and expected characteristics of the study treatment, and thus is not based on specific hypothesis-testing assumptions.

Stage 2: The Primary Efficacy Endpoints for Stage 2 will be the BSID-III Gross Motor domain change from baseline to Week 48 (Month 12) and CSF HexA activity change from baseline to Week 48 (Month 12). The sample size is not based upon hypothesis testing assumptions but rather the desire to assess neurodevelopment of participants at ages when they would be expected to be declining based on natural history data.

14.2. General Methods

Stage 1 includes 12 participants at differing doses of AXO-AAV-GM2 which precludes tabulation of outcomes in a mathematically reasonable manner. Thus, the analysis of Stage 1 outcomes will focus comparisons of individual participant data using graphical displays (e.g., line-scatterplots of each participant's outcomes over time) to allow for visual inspection of any trends between participants. Limited tabulations may be created to present overall Stage 1 data (e.g., as for adverse event incidence), as the data warrant. The methods provided below are generally intended to describe the analysis of Stage 2 outcomes but may also apply to Stage 1 in some instances (e.g., adverse event coding).

Stage 2 will include a comprehensive assessment of both efficacy and safety outcomes, with tables, listings, and figures generated. Data will be tabulated and presented using both descriptive and inferential statistics (where applicable) where specified. Select continuous endpoints will be assessed a mixed model for repeated measures (MMRM) of changes over time with effects for visit, the baseline value (of the outcome of interest), and a random effect for participant. Graphical displays of least squares mean (LSMean) changes over time will be presented.

The statistical analysis will be undertaken by the Sponsor or a third-party vendor. The statistical analysis and report will conform to the relevant ICH requirements.

SAS version 9.4 or later will be used for the analysis.

There is no formal hypothesis being tested. However, comparison to external data sources (e.g., literature, NH studies) may be performed as the data allow.

14.3. Analysis Populations

There are two pre-defined analysis populations in this study.

- **Safety Population:** All participants treated with study treatment (either a partial dosing or a complete dosing) will be included in the Safety Population. All safety analyses (e.g., adverse events, clinical laboratory) will be performed using the Safety Population.
- **Intent-to-Treat Population:** The Intent-to-Treat (ITT) population will be defined as all Safety Population infantile-onset participants from Stage 2 who have received the full dose of study medication. All efficacy analyses will be performed using the ITT population. This is the primary population of interest for efficacy assessments.

14.4. Primary Efficacy Endpoints

The Primary Efficacy Endpoints are:

- Clinical Function: BSID-III Gross Motor domain
  - The continuous clinical outcome BSID-III Gross Motor domain will be assessed as a change from baseline to Week 48 (Month 12).
- Surrogate Biologic Marker: CSF HexA activity
  - CSF HexA activity will be assessed as a change from baseline to Week 48 (Month 12), including the baseline (pre-treatment) value as a covariate in the model.

This is an open-label, single-arm study in which outcomes will be compared to a pre-specified external (e.g., NHS) study database or to the literature. There is no alpha-control applied for having co-primary endpoints as no formal hypothesis testing is planned.

14.5. Secondary Efficacy Endpoints

Secondary efficacy endpoints include both biologic markers of disease and measurements of clinical function.

For the biologic markers (e.g., CSF HexA at later time points, GM2 ganglioside levels), changes from baseline over time will be presented.

For clinical endpoints, outcomes are measured at multiple time points during the course of the 12-month period, and thus will be presented as follows:

Continuous clinical outcomes will be assessed as for the biologic markers, i.e., with changes from baseline over time.

- BSID-III Composite score change from baseline to Week 4, Week 12, Week 24 and Week 48

The proportion of participants will be assessed via time-to-event methods, presented via Kaplan-Meier plots. Comparisons to the NHS study will be made, where possible, using similar methodology as for the primary clinical endpoint.

- Proportion of Motor Milestone responders based on HINE Section 2 (HINE-2) as assessed in HINE Section 2 at Week 4, Week 12, Week 24 and Week 48
- Responder defined as:
  i. The participant demonstrated at least a 2-point increase in the motor milestones category of ability to kick or achievement of maximal score on that category (touching toes), or a 1-point increase in the motor milestones of head control, rolling, sitting, crawling, standing, or walking

  AND

  ii. Among the 7 motor milestone categories (with the exclusion of voluntary grasp), the participant demonstrated improvement (as defined in [i]) in more categories than worsening

Motor milestones are important as they provide a contextualized assessment that is relatable to everyday function and capabilities (Gaussen 1985). The HINE was originally developed to assess development of global neurological function in normal infants (Dubowitz et al. 2005, Haataja et al. 1999) and has been evaluated in several infant populations (Frisone et al. 2002, Romeo et al. 2016, Ricci et al. 2006).

HINE is comprised of eight tests: head control, sitting, voluntary grasp, ability to kick in supine position, rolling, crawling, standing, and walking. There are 26 possible motor milestones that can be achieved using this schema.

MOTOR FUNCTION	MILESTONE PROGRESSION SCORE				
	0	1	2	3	4
Voluntary grasp	No grasp	Uses whole hand	Index finger and thumb but immature grasp	Pincer grasp	
Ability to kick (in supine position)	No kicking	Kicks horizontal; legs do not lift	Upward (vertical)	Touches leg	Touches toes
Head control	Unable to maintain upright	Wobbles	All the time upright		
Rolling	No rolling	Rolling to side	Prone to supine	Supine to prone	
Sitting	Cannot sit	Sits with support at hips	Props	Stable sit	Pivots (rotates)
Crawling	Does not lift head	On elbow	On outstretched hand	Crawling flat on abdomen	On hands and knees
Standing	Does not support weight	Supports weight	Stands with support	Stands unaided	
Walking	No walking	Bouncing	Cruising (holding on)	Walking independently	

IMPROVEMENT

The HINE-2 contains a standardized tool for assessing motor milestone achievement, consisting of structured, developmentally appropriate items that assess incremental changes in head control, sitting, voluntary grasp, ability to grasp, ability to kick, rolling, crawling, standing, and walking (Bishop et al. 2018). Bishop and colleagues reported the first use of the HINE-2 in a prospective nusinersen treatment trial with SMA infants and demonstrated that motor milestone assessment using the HINE-2 was feasible and practical in symptomatic, fragile (extremely low functioning at

baseline) infants with type 1 SMA. A natural history study using the HINE-2 indicated that SMA infants do not achieve motor milestones and seldom make even incremental improvements with development, as also reported for a significant proportion of individuals with infantile-onset TSD or SD. (De Sanctis et al. 2016)

For the HINE-2 category of ability to kick, similar to the definition of improvement in (i) above, worsening is defined as at least a 2-point decrease or decrease to the lowest possible score of no kicking. For the other 6 categories, worsening is defined as at least a 1-point decrease. Participants who die or withdrew from the study will be counted as non-responders and will be included in the denominator for the calculation of the percentage.

- Proportion of infantile-onset participants maintaining the ability to sit without support as assessed in HINE-2 at Week 4, Week 12, Week 24 and Week 48.

  Of the subset of infantile-onset participants enrolled with the ability to sit up – the proportion maintaining the ability to sit without support through Week 48 will be provided. A Kaplan-Meier plot of time to event (time to loss of ability to sit upright) will be provided to allow for visual inspection of the time-profile of the loss. For participants who discontinue the study prior to Week 48, every effort will be made to determine sitting ability at Week 48.

14.6. Safety Endpoints

Adverse events will be coded using the MedDRA coding dictionary. Incidence of each system organ class and unique preferred term will be tabulated. AE incidence will also be tabulated according to relationship to study medication and severity (graded according to NCI CTCAE v5.0). Serious AEs and AEs resulting in premature discontinuation will be tabulated. AESIs will be tabulated along with all events as well as separately.

15. ACCESS TO SOURCE DATA/DOCUMENTS FOR MONITORING

In accordance with ICH GCP (ICH E6(R2)) guidelines, CRAs must have direct access to the Investigator's source documentation in order to verify the data recorded in the eCRF. The CRAs are responsible for routine review of the CRFs according to details contained in the Clinical Monitoring Plan (CMP) throughout the study, to verify adherence to the protocol, and the completeness, consistency, and accuracy of the data being entered on them. The CRAs should have access to any participant records needed to verify the entries in the eCRF. The Investigator agrees to cooperate with the CRAs to ensure that any problems detected in the course of these monitoring activities are resolved.

15.1. Audits and Inspections

During the conduct of the study, the sponsor, its representative, and regulatory authorities may conduct audits of any data and any facility participating in the study. The investigator and institutions involved in the study will permit such study-related audits and provide direct access to all study records and facilities. And the investigator agrees to participate in audits conducted at a convenient time in a reasonable manner.

In the event of an inspection by any regulatory authority, the investigator should promptly notify the sponsor.

15.2. Institutional Review Board (IRB)

The Principal Investigator must obtain IRB approval for the investigation from committees within the institution. Initial IRB approval, and all materials approved by the IRB for this study including the participant consent form and recruitment materials must be maintained by the Investigator and made available for inspection.

16. QUALITY CONTROL AND QUALITY ASSURANCE

16.1. Deviations from Protocol

Protocol deviations, except those intended to reduce immediate risk to study participants, will only be implemented by Sponsor-initiated amendments. IRB/EC approval must be obtained before changes can be implemented.

17. STUDY COMMITTEES

17.1. Independent Data and Safety Monitoring Committee (DSMC)

The DSMC is an independent multidisciplinary group (independent of both the sponsor and CRO) who collectively has experience in the management of participating participants as well as in the conduct and monitoring of clinical trials.

The DSMC will meet at regular intervals allowing for the timely review of 4-week safety data for Stage 1 participants (see Section 8.1.1). The DSMC and Sponsor will determine whether enrollment of participants may proceed according to the dose-escalation plan (Table 10). Based on satisfactory review of 4-week safety data for each participant, accrued safety data of all participants, and review for potential safety signals related to AXO-AAV-GM2 as well as that of the neurosurgical administration/infusion procedures, the DSMC may recommend to continue the study as designed, to continue the study with modifications (e.g. dose de-escalation/escalation in the event of toxicity), or to terminate the study early based on the safety.

After the last Stage 1 participant has been dosed and observed for 4 weeks, the DSMC will review the cumulative safety data in conjunction with the Sponsor and determine the optimal AXO-AAV-GM2 dose regimen to be administered in Stage 2. The DSMC will continue to meet at regular intervals throughout the duration of the study.

The DSMC will review enrollment progress, baseline characteristics of the study population, all treatment-emergent safety reports, clinical laboratory and imaging data. The members of the DSMC will be notified of all SAEs.

Additional details regarding the specifics of the DSMC operations may be found in the DSMC Charter.

18. ETHICS

18.1. Ethics Review

The final study protocol, including the final version of the Informed Consent Form (ICF), must be approved or given a favorable opinion in writing by an Institutional Review Board (IRB). The investigator must have written approval from all required committees before he or she can enroll any participant into the study.

UMass Chan Medical School will be responsible for informing the IRB of any amendment to the protocol in accordance with local requirements. In addition, the IRB must approve all advertising used to recruit patients for the study. The protocol must be re-approved by the IRB upon receipt of amendments and annually, as local regulations require.

The Principal Investigator is also responsible for providing the IRB with reports of any reportable serious adverse drug reactions from any other study conducted with the investigational product.

Progress reports and notifications of serious adverse drug reactions will be provided to the IRB according to local regulations and guidelines.

18.2. Ethical Conduct of the Study

The study will be performed in accordance with ethical principles that have their origin in the Declaration of Helsinki and are consistent with ICH/Good Clinical Practice, applicable regulatory requirements.

18.3. Written Informed Consent

The Principal Investigator(s) at each center will ensure that the participant's caregiver is given full and adequate oral and written information about the nature, purpose, possible risks and benefit of the study. Participant's caregivers must also be notified that they are free to discontinue from the study at any time. The participant and caregiver should be given the opportunity to ask questions and allowed time to consider the information provided. The informed consent should also convey that an autopsy may be requested if the patient dies (from any cause) during the study.

The signed and dated ICF/Assent must be obtained before conducting any study procedures.

The Principal Investigator(s) must maintain the original, signed ICF. A copy of the signed ICF/Assent must be given to the participant's caregiver.

19. DATA HANDLING AND RECORDKEEPING

19.1. Retention of Records

The Principal Investigator must maintain all documentation relating to the study for a period of 2 years after the last marketing application approval, or if not approved 2 years following the discontinuance of the test article for investigation. If it becomes necessary for UMass Chan Medical School or the Regulatory Authority to review any documentation relating to the study, the Investigator must permit access to such records.

20. PUBLICATION POLICY

Publication by the site of any data from this study must be carried out in accordance with the clinical study site agreements. A description of this clinical trial will be available on the relevant clinical trial registries.

21. LIST OF REFERENCES

BACTRIM™ [sulfamethoxazole and trimethoprim] Package Insert (2013) AR SCIENTIFIC, INC. Philadelphia, PA USA, Rev 13, June 2013.

Bembi B, Marchetti F, Guerci VI, et al. (2006). Substrate reduction therapy in the infantile form of Tay-Sachs disease. Neurology 66(2): 278-280.

Bishop KM, Montes J, Finkel RS (2018). Motor Milestone Assessment of Infants with Spinal Muscular Atrophy Using the Hammersmith Infant Neurological Exam - Part 2: Experience from a Nusinersen Clinical Study. Muscle Nerve 57: 142-146.

Bley AE, Giannikopoulos OA, Hayden D, et al. (2011). Natural history of infantile GM2 gangliosidosis. Pediatrics 128(5): e1233-1241.

Bobo HR, Laske DW, Akbasak A, Morrison PF, et al. (1994). Convection-enhanced delivery of macromolecules in the brain (intersidal infusion/bulk flow/autoradiography). Proc Nat Acad Sci USA 91: 2076-2080.

Bonadio W (2014). Pediatric lumbar puncture and cerebrospinal fluid analysis. J Emerg Med 46: 141-150.

Bradbury AM, Cochran JN, McCurdy VJ, Johnson AK, et al. (2013). Therapeutic response in feline sandhoff disease despite immunity to intracranial gene therapy. Mol Ther 21(7): 1306-1315.

Cachon-Gonzalez MB, Wang SZ, Lynch A, Ziegler R, et al. (2006). Effective gene therapy in an authentic model of Tay-Sachs-related diseases. Proc Natl Acad Sci USA 103(27): 10373-10378.

Cachon-Gonzalez MB, Wang SZ, McNair R, Bradley J, et al. (2012). Gene transfer corrects acute GM2 gangliosidosis--potential therapeutic contribution of perivascular enzyme flow. Mol Ther 20(8):1489-1500.

Cachon-Gonzalez MB, Zaccariotto E, Cox TM (2018). Genetics and Therapies for GM2 Gangliosidosis. Curr Gene Ther 18(2): 68-89.

Chien Y-H, Lee N-C, Tseng S-H, Tai C-H, et al. (2017). Efficacy and safety of AAV2 gene therapy in children with aromatic L-amino acid decarboxylase deficiency: an open-label, Phase 1/2 trial. Lancet Child Adolesc Health 1: 265–73.

Christine CW, Bankiewicz KS, Van Laar AD, Richardson RM, et al. (2019). Magnetic Resonance Imaging–Guided Phase 1 Trial of Putaminal AADC Gene Therapy for Parkinson's Disease. Ann Neurol 85: 704-714.

Conzelmann E, Kytzia HJ, Navon R (1983). Ganglioside GM2 N-acetyl-beta-D-galactosaminidase activity in cultured fibroblasts of late-infantile and adult GM2 gangliosidosis patients and of healthy probands with low hexosaminidase level. Am J Hum Genet 35(5): 900-913.

Corti M, Elder M, Falk D, Lawson L, et al. (2014). B-Cell Depletion is Protective Against Anti-AAV Capsid Immune Response: A Human Subject Case Study. Mol Ther Methods Clin Dev 1.

Corti M, Gessler D, Norman S, Coleman K, et al. (2018). American Society of Gene & Cell Therapy Annual Meeting, Abstract 62. Immune Blockade in CNS Gene Therapy Improves Safety and Clinical Outcome. Molecular Therapy 26(5S1): 32.

Corti M, Liberati C, Smith BK, Lawson LA, et al. (2017). Safety of Intradiaphragmatic Delivery of Adeno-Associated Virus-Mediated Alpha-Glucosidase (rAAV1-CMV-hGAA) Gene Therapy in Children Affected by Pompe Disease. Hum Gene Ther Clin Dev 28(4): 208-218.

D'Avola D, López-Franco E, Sangro B, Pañeda A, et al. (2016). Phase 1 open label liver-directed gene therapy clinical trial for acute intermittent porphyria. Journal of Hepatology 65:776-783.

De Sanctis R, Coratti G, Pasternak A, Montes J, et al. (2016). Developmental milestones in type I spinal muscular atrophy. Neuromuscul Disord 26: 754–759.

Dubowitz L, Ricciw D, Mercuri E (2005). The Dubowitz neurological examination of the full-term newborn. Ment Retard Dev Disabil Res Rev 11: 52-60.

Elder ME, Nayak S, Collins SW, Lawson LA, et al. (2013). B-cell Depletion and Immunomodulation Prior to Initiation of Enzyme Replacement Therapy Blocks the Immune Response to Acid Alpha Glucosidase in Infantile Onset Pompe Disease. J Pediatr 163(3): 847-54.

Ellinwood NM, Ausseil J, Desmaris N, Bigou S, et al. (2011). Safe, Efficient, and Reproducible Gene Therapy of the Brain in the Dog Models of Sanfilippo and Hurler Syndromes. Molecular Therapy 19(2): 251–259.

Favaro P, Finn JD, Siner JI, Wright F, et al. (July 2011). Safety of Liver Gene Transfer Following Peripheral Intravascular Delivery of Adeno-Associated Virus (AAV)-5 and AAV-6 in a Large Animal Model. Human Gene Therapy 22: 843-852.

Ferreira CR and Gahl WA (2017). Lysosomal storage diseases. Transl Sci Rare Dis 2(1-2): 1-71.

Frisone MF, Mercuri E, Laroche S, et al. (2002). Prognostic value of the neurologic optimality score at 9 and 18 months in preterm infants born before 31 weeks' gestation. J Pediatr 140: 57-60.

Gaussen T (1985). Developmental milestones or conceptual milestones? Some practical and theoretical limitations in infant assessment procedures. Child Care Health Dev 10:99–1115.

Golebiowski D, Van der Bom IMJ, Kwon CS, Miller AD, et al. (2017). Direct Intracranial Injection of AAVrh8 Encoding Monkey beta-N-Acetylhexosaminidase Causes Neurotoxicity in the Primate Brain. Hum Gene Ther 28: 510-522.

Haataja LI, Mercuri E, Regev R, et al. (1999). Optimality score for the neurologic examination of the infant at 12 and 18 months of age. J Pediatr 135: 153–161.

Hammelrath L, Skokic S, Khmelinskii A, et al. (2016). Morphological maturation of the mouse brain: An in vivo MRI and histology investigation. Neuroimage 125:144-152.

Hudry E and Vandenberghe LH (2019). Therapeutic AAV Gene Transfer to the Nervous System: A Clinical Reality. Neuron 101: 839-862.

Jang YE, Lee JH, Seo YS (2019). Lumbosacral and thoracolumbosacral cerebrospinal fluid volume changes in neonates, infants, children, and adolescents: A retrospective magnetic resonance imaging study. Paediatr Anaesth 29(1): 92-97.

Kazi ZB, Desai AK, Berrier KL, Troxler RB, et al. (2017). Sustained immune tolerance induction in enzyme replacement therapy–treated CRIM-negative patients with infantile Pompe disease. JCI Insight 2(14):e94328.

Kells AP, Hadaczek P, Yin D, Bringas J, et al. (2009). Efficient gene therapy-based method for the delivery of therapeutics to primate cortex. Proc Natl Acad Sci U S A. 2009 Feb 17;106(7): 2407-11.

Leinekugel PS, Conzelmann ME, Sandhoff K (1992). Quantitative correlation between the residual activity of beta-hexosaminidase A and arylsulfatase A and the severity of the resulting lysosomal storage disease. Hum Genet 88(5): 513-523.

Ma Y, Hof PR, Grant SC, et al. (2005). A three-dimensional digital atlas database of the adult C57BL/6J mouse brain by magnetic resonance microscopy. Neurosci 135:1203-1215.

Maegawa GHB, Stockley T, Tropak M, et al. (2006). The Natural History of Juvenile or Subacute GM2 Gangliosidosis: 21 New Cases and Literature Review of 134 Previously Reported Pediatrics 118: e1550-e1562.

Maegawa GH, van Giersbergen PL, Yang S, et al. (2009). Pharmacokinetics, safety and tolerability of miglustat in the treatment of pediatric patients with GM2 gangliosidosis. Mol Genet Metab 97(4): 284–291.

McAllister A, Leach J, West H, et al. (2017). Quantitative Synthetic MRI in Children: Normative Intracranial Tissue Segmentation Values during Development. AJNR Am J Neuroradiol 38(12): 2364-2372.

McCurdy VJ, Rockwell HE, Arthur JR, Bradbury AM, et al. (2015). Widespread correction of central nervous system disease after intracranial gene therapy in a feline model of Sandhoff disease. Gene Ther 22(2): 181-189.

Nestrasil I, Ahmed A, Utz JM, et al. (2018). Distinct progression patterns of brain disease in infantile and juvenile gangliosidoses: Volumetric quantitative MRI study. Mol Genet Metab 123(2): 97-104.

Poplack DG, Bleyer WA, Wood JH, et al. (1977). A primate model for study of methotrexate pharmacokinetics in the central nervous system. Cancer Res 37: 1982-1985.

PREVACID® (lansoprazole) Package Insert (2017). Takeda Pharmaceuticals America, Inc. Deerfield, IL.

RAPAMUNE® (sirolimus) Package Insert (2017). Pfizer Inc. USA.

Regier DS, Proia RL, D'Azzo A et al. (2016). The GM1 and GM2 Gangliosidoses: Natural History and Progress toward Therapy. Pediatr Endocrinol Rev 13(Suppl 1): 663-673.

Ricci D, Guzzetta A, Cowan F, et al. (2006). Sequential neurological examinations in infants with neonatal encephalopathy and low Apgar scores: relationship with brain MRI. Neuropediatrics 37:148–153.

RITUXAN® (rituximab) Package Insert (2019). Biogen and Genentech USA, Inc.

Rockwell HE, McCurdy VJ, Eaton SC, Wilson DU, et al. (2015). AAV-mediated gene delivery in a feline model of Sandhoff disease corrects lysosomal storage in the central nervous system. ASN Neuro 7(2).

Romeo DM, Ricci D, Brogna C, et al. (2016). Use of the Hammersmith Neurological Examination in infants with cerebral palsy: A critical review of the literature. Dev Med Child Neurol 58: 240–245.

Sandhoff K and Harzer K (2013). Gangliosides and gangliosidoses: principles of molecular and metabolic pathogenesis. J Neurosci 33(25): 10195-10208.

Shapiro BE, Pastores GM, Gianutsos J, et al. (2009). Miglustat in late-onset Tay-Sachs disease: a 12-month, randomized, controlled clinical study with 24 months of extended treatment. Genet Med 11(6):425–433.

Smith NJ, Winstone AM, Stellitano L, et al. (2012). GM2 gangliosidosis in a UK study of children with progressive neurodegeneration: 73 cases reviewed. Dev Med Child Neurol 54(2):176–182.

Solovyeva VV, Shaimardanova AA, Chulpanova DS, et al. (2018). New Approaches to Tay-Sachs Disease Therapy. Front Physiol 9: 1663.

Sparrow SS, Cicchetti DV, Balla DA. (2017). Vineland Adaptive Behavior Scales. Second (Vineland™-II). http://www.pearsonclinical.com/psychology/products/100000668/vineland-adaptive-behavior-scales-second-edition-vineland-ii-vineland-ii.html.

Tardieu M, Zerah M, Gougeon ML, Ausseil J, et al. (2017). Intracerebral gene therapy in children with mucopolysaccharidosis type IIIB syndrome: An uncontrolled phase 1/2 clinical trial. Lancet Neurol 16: 712-720.

Tutunji R, El Homsi M, Saaybi S, et al. (2018). Thalamic volume and dimensions on MRI in the pediatric population: Normative values and correlations: (A cross sectional study). Eur J Radiol 109: 27-32.

Utz JR, Kime S, King K, et al. (2017). Infantile gangliosidoses: Mapping a timeline of Molecular Genetics and Metabolism 121:170–179.

Xiaojing Y, Zhu T, Li J, and Xiao X (2004). AAV-Mediated Gene Therapy for Systemic Lupus Erythematosus (SLE). Molecular Therapy 9(1, S16).

Yin D, Richardson RM, Fiandaca MS, et al. (2010). Cannula placement for effective convection-enhanced delivery in the nonhuman primate thalamus and brainstem: implications for clinical delivery of therapeutics. J Neurosurg 113(2):240-248.

ZAVESCA® (miglustat) Package Insert (2011). Actelion Pharmaceuticals USA, Inc.