Additional file 5
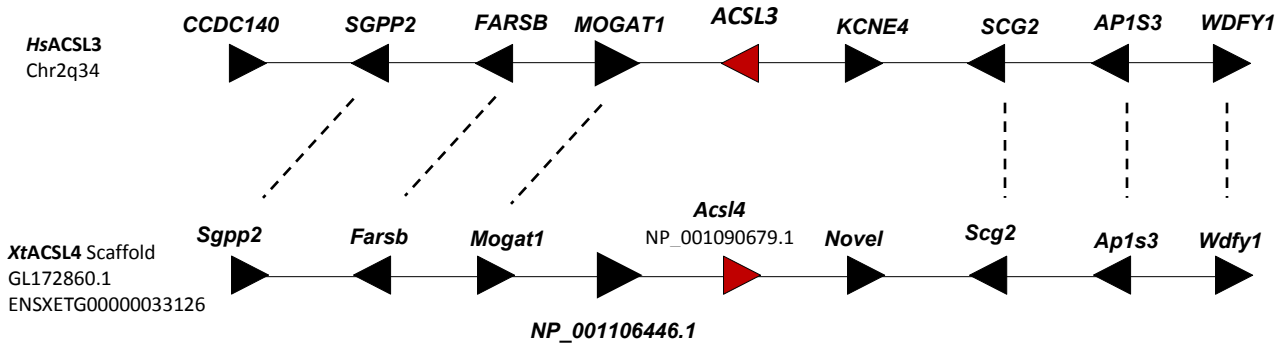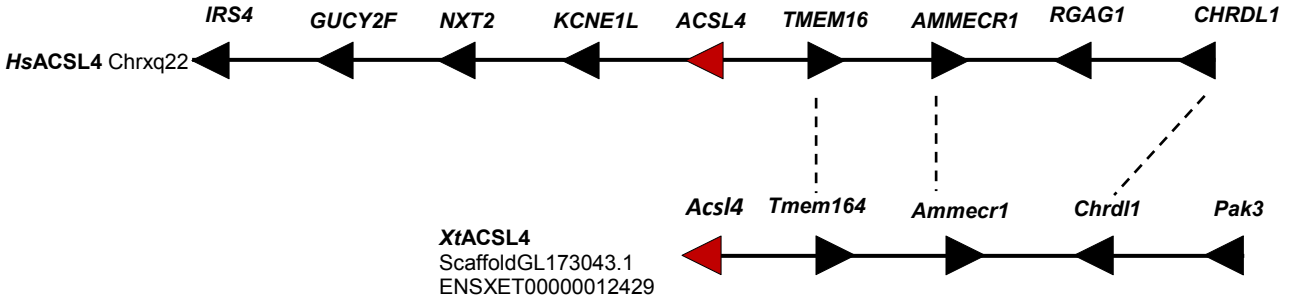
Xenopus tropicalis Acsl3 and *Acsl4* and corresponding genome location in human