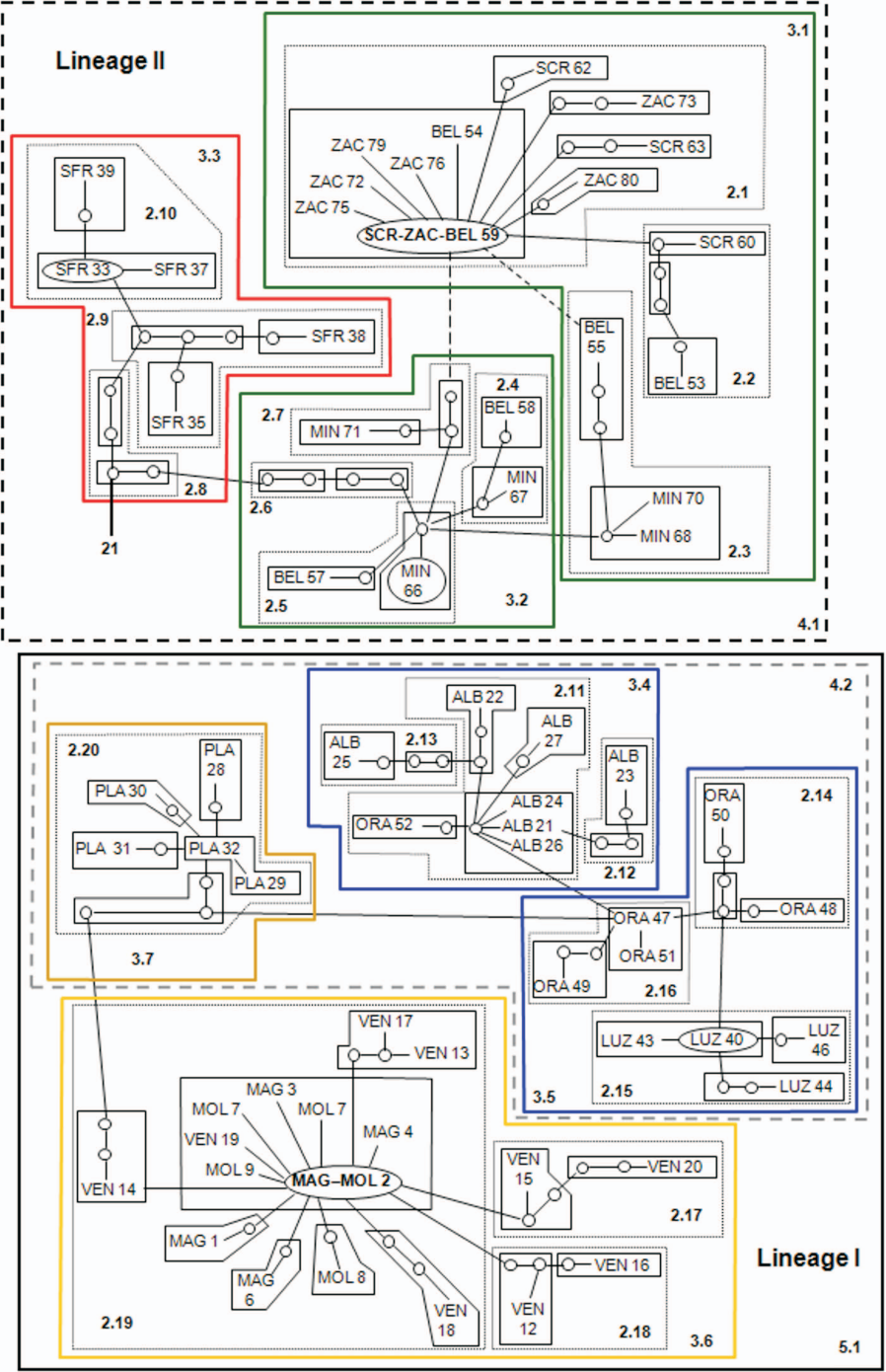
Lineage II
3.1
SCR 62
ZAC 73
BEL 54
ZAC 79
ZAC 76
SCR 63
ZAC 72
ZAC 80
ZAC 75
2.1
SCR-ZAC-BEL 59
SCR 60
3.3
SFR 39
2.10
SFR 33
SFR 37
2.9
SFR 38
SFR 35
BEL 55
BEL 53
2.2
2.4
2.7
MIN 71
BEL 58
MIN 67
2.8
2.6
MIN 70
MIN 68
2.3
21
BEL 57
MIN 66
2.5
3.2
4.1
4.2
3.4
ALB 22
2.11
ALB 27
ALB 25
2.13
ALB 23
2.20
PLA 28
PLA 30
ALB 24
ORA 52
ALB 21
ALB 26
2.12
2.14
ORA 50
PLA 31
PLA 32
PLA 29
ORA 48
ORA 47
ORA 51
ORA 49
2.16
3.7
VEN 17
VEN 13
LUZ 43
LUZ 40
LUZ 46
3.5
2.15
LUZ 44
MAG 3
MOL 7
MOL 7
MAG 4
VEN 19
MOL 9
VEN 14
MAG–MOL 2
VEN 15
VEN 20
2.17
MAG 1
MAG 6
MOL 8
VEN 18
VEN 16
VEN 12
2.18
2.19
3.6
Lineage I
5.1