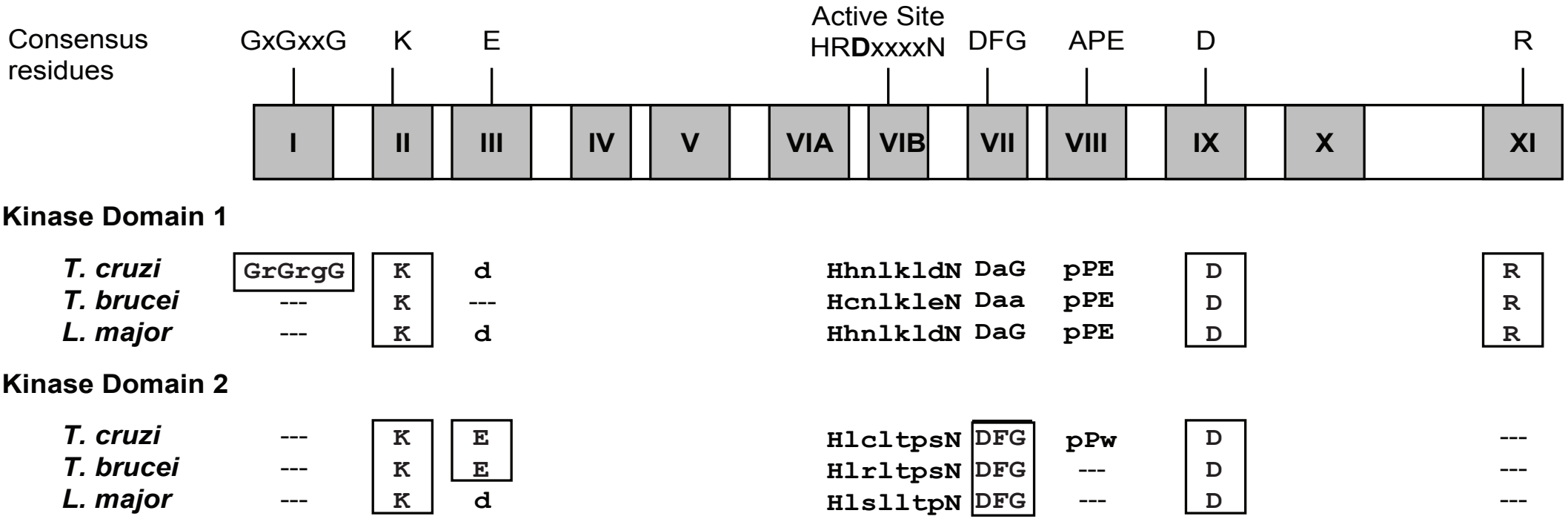
Consensus residues
GxGxxG
K
E
Active Site
HRDxxxxN
DFG
APE
D
R
I
II
III
IV
V
VIA
VIB
VII
VIII
IX
X
XI
Kinase Domain 1
T. cruzi GrGrgG K d HhnlkldN DaG pPE D R
T. brucei --- K --- HcnlkleN Daa pPE D R
L. major --- K d HhnlkldN DaG pPE D R
Kinase Domain 2
T. cruzi --- K E HlcltpsN DFG pPw D ---
T. brucei --- K E HlrltpsN DFG --- D ---
L. major --- K d HlslltpN DFG --- D ---