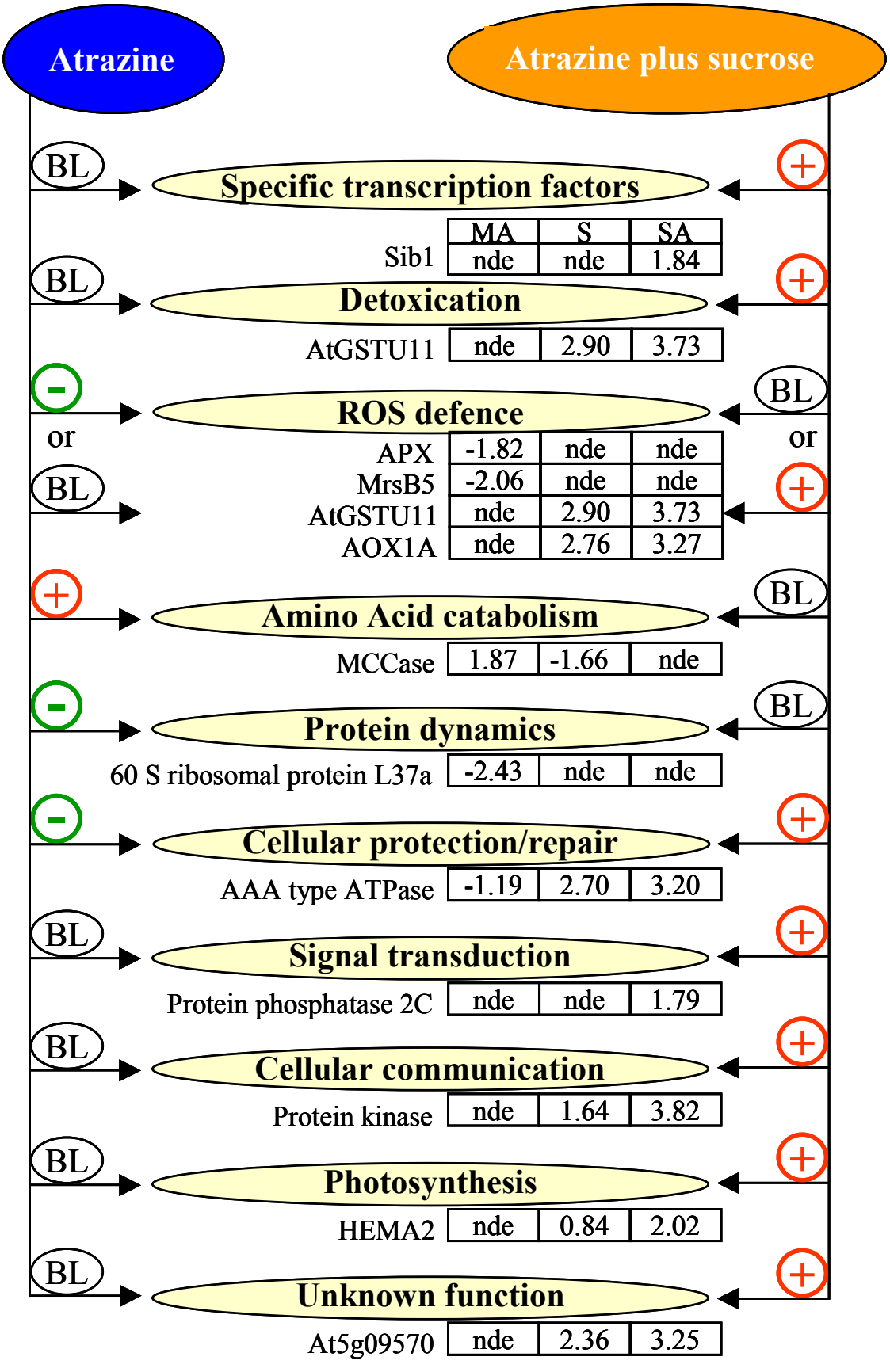
Atrazine
Atrazine plus sucrose
BL
Specific transcription factors
+
MA S SA
Sib1 nde nde 1.84
BL
Detoxication
+
AtGSTU11 nde 2.90 3.73
-
ROS defence
BL
or
or
APX -1.82 nde nde
MrsB5 -2.06 nde nde
AtGSTU11 nde 2.90 3.73
AOX1A nde 2.76 3.27
BL
+
+
Amino Acid catabolism
BL
MCCase 1.87 -1.66 nde
-
Protein dynamics
BL
60 S ribosomal protein L37a -2.43 nde nde
-
Cellular protection/repair
+
AAA type ATPase -1.19 2.70 3.20
BL
Signal transduction
+
Protein phosphatase 2C nde nde 1.79
BL
Cellular communication
+
Protein kinase nde 1.64 3.82
BL
Photosynthesis
+
HEMA2 nde 0.84 2.02
BL
Unknown function
+
At5g09570 nde 2.36 3.25