(A)

```
AtMED21  MDI I SQL QEQVNTI AAI TFNAF GTL QRDAPPVQL SPNYPEPPATTTV  47
SlMED21  MDI I SQL QEQVNTI AALAFNTF GTL QRDAPPVRL SPNYPEPPPANPT  47

AtMED21  TDDATPFPEQPKQL SAGL VKAAKQF DAL VAALPL SEGGEGAQL KRI A  94
SlMED21  EDSAN- VAEQPKQMSAAF VKAAKQF DVL VAALPL SDGSEEAQL KRI A  93

AtMED21  EL QVENDL VGQEL QKQL EAAEKEL KQVQELF GQAADNCL NMKKPE   139
SlMED21  EL QAENDAVGQEL QKQL EAAEKEL KQVQELF NQATDNCL NLKKPE   138
```
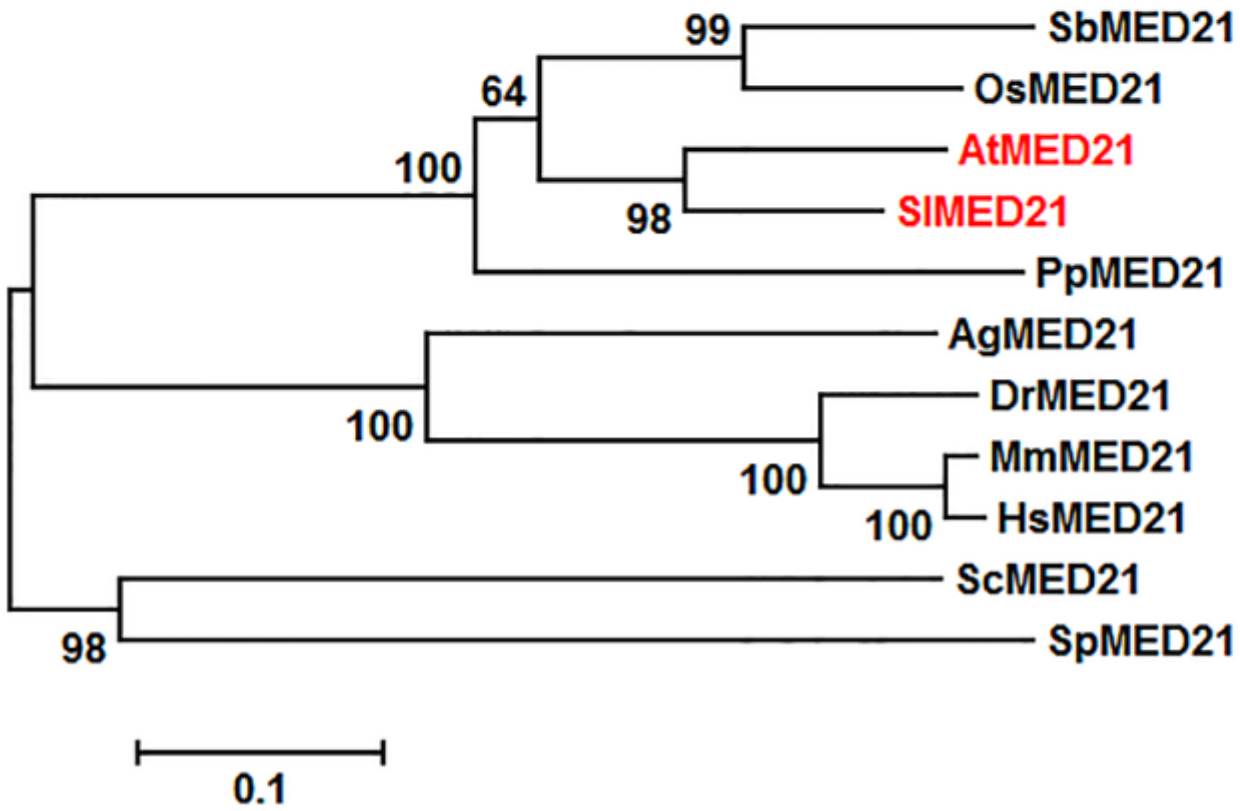
(B)